TECHNICAL REPORT DOCUMENTATION PAGE

1. Report No.: FHWA/TX -04/0-4375-TT-3	2. Government Accession No.:	3. Recipient's Catalog No.:
4. Title and Subtitle: Innovative Design and Construction Methods for Off-System Bridges: Final Report		5. Report Date: November 2003 6. Performing Organization Code: TechMRT
7. Author(s): R. Scott Phelan, W. Pennington Vann, P.W. Jayawickrama, William R. Burkett, Daniel Rasband, Michael Leaverton, Sanjaya Senadheera		8. Performing Organization Report No.0-4375-TT-3
9. Performing Organization Name and Address Texas Tech University Department of Civil Engineering Box 41023 Lubbock, Texas 79409-1023		10. Work Unit No. (TRAIS) 11. 0-4375-TT
12. Sponsoring Agency Name and Address: Texas Department of Transportation Research and Technology P. O. Box 5080 Austin, TX 78763-5080		13. Type of Report and Period Covered: Technical Report 9/1/2001 – 8/31/03 14. Sponsoring Agency Code:

15. Supplementary Notes:
Study conducted in cooperation with the Texas Department of Transportation and the Federal Highway Administration. Research Project Title: "Innovative Design and Construction Methods for Off-System Bridges"

16. Abstract: A research project was undertaken to develop innovative design and construction methods for off-system bridges that will significantly reduce bridge closure times while maintaining the quality of the construction and involving practical construction procedures. The Texas Tech University (TTU) research team has reviewed existing solutions to both the substructure and superstructure design of off-system bridges, including both standard TxDOT approaches and innovative state-of-the-art proprietary/commercial approaches. Also, several contracting issues pertinent to the problem have been addressed, especially the need for the prospect of other similar work in the future if a contractor is to invest in the equipment and training needed for an innovative method. Because of the strong dependence of the substructure on site conditions, no single substructure design is recommended at this time, although several approaches are discussed in detail that would not require the bridge to be taken out of service until the final abutments are installed. Two specific innovative superstructure designs with related construction schemes are presented. One is a full-width, full-depth precast deck panel design in which the panels are attached to traditional precast concrete or steel I-beams with new types of multi-directional shear and leveling screws. Only one or two small (30-ton or smaller) cranes are required. Also, only construction work from the top of the bridge is required. The method is expected to require only one or two days of bridge closure. For a 90-foot span without streambed access it will require specially designed erection beams and sliders. The other superstructure design is an adaptation of the patented channel bridge. For a 50-foot span this design will have quite shallow edge members that will provide excellent aesthetics and superior hydraulic profile, although it will require a larger crane and likely higher costs than for the first design. For a 90-foot span the post-tensioned edge members of the channel bridge design will have to be deeper and act as barriers.

17. Key Words: Prefabricated Construction, Bridge Deck Replacement, Channel Bridge, Multi-Directional Connectors, Shear & Leveling Screws, Concrete Bridge		18. Distribution Statement: No restrictions. This document is available to the public through the National Technical Information Service, Springfield, Virginia 22161	
19. Security Classif. (of this report) Unclassified	20. Security Classif. (of this page) Unclassified	21. No. of Pages 153	22. Price

Innovative Design and Construction Methods for Off-System Bridges: Final Report

By

R. Scott Phelan Ph.D., P.E.
W. Pennington Vann Ph.D., P.E.
P.W. Jayawickrama Ph.D., P.E.
William R. Burkett Ph.D., P.E.
Michael Leaverton, P.E.
Daniel Rasband, EIT
Sanjaya Senadheera, Ph.D.

Report 0-4375-TT-3

Project Number 0-4375-TT
"Innovative Design and Construction Methods
for Off-System Bridges"

Performed in cooperation with the Texas Department of Transportation
And the Federal Highway Administration

by the

Center for Multidisciplinary Research in Transportation
Texas Tech University
Box 41023
Lubbock, TX 79409-1023

November 2003

IMPLEMENTATION STATEMENT

Implementation should be a natural conclusion to this research project. With over 12,000 off-system bridges in Texas, many requiring immediate replacement, the goal of this research effort is first to identify several upcoming off-system bridge replacement projects and then to implement the innovations presented in this research to the identified off-system bridge replacement projects.

AUTHOR'S DISCLAIMER

The contents of this report reflect the views of the authors who are responsible for the facts and the accuracy of the data presented herein. The contents do not necessarily reflect the official view or policies of the Federal Highway Administration (FHWA) or the Texas Department of Transportation. This report does not constitute a standard, specification, or regulation report.

PATENT DISCLAIMER

There was no invention or discovery first actually reduced to practice in the course of or under this contract, including any art, method, process, machine, manufacture, design or composition of matter, or any new useful improvement thereof, or any variety of plant, which is or may be patentable under the patent laws of the United States of America or any foreign country. However, there may possibly have been a discovery conceived in the course of this contract which may be patentable under the patent laws of the United States of America or a foreign country.

ENGINEERING DISCLAIMER

Not intended for construction, bidding, or permit purposes. Engineer in charge of this research is Randal Scott Phelan, Ph.D., P.E., Texas Professional Engineer #86568.

TRADE NAMES AND MANUFACTURERS' NAMES

The United States Government and the State of Texas do not endorse products or manufacturers. Trade or manufacturers' names appear herein solely because they are considered essential to the object of this report.

ACKNOWLEDGEMENTS

Support, guidance and assistance from Lloyd Wolf, David Hohmann, Brian Merrill, Mike Hyzak, and Ronald Medlock of the TxDOT Bridge Division, and from Jim Abrams Jr., President Austin Prestress, is acknowledged and appreciated. In addition, input and advice from Daniel Tassin, Egemen Ayna, and Michael Smart of International Bridge Technologies (IBT), San Diego, CA., on the *Shallow Channel* concept is greatly valued. Also acknowledged is Jean Roguier of IBT for the *Shallow Channel* concept drawings. Assistance from TTU graduate students Carlos Morales on all remaining drawings and Sanad Shamsan for initial manuscript editing is gratefully acknowledged. Finally, assistance from Carmen Settle, Lynnetta Hibdon, Mary Benton, and Marian Blaylock on final manuscript editing is greatly appreciated.

SI* (MODERN METRIC) CONVERSION FACTORS

APPROXIMATE CONVERSIONS TO SI UNITS

Symbol	When You Know	Multiply By	To Find	Symbol
		LENGTH		
in	inches	25.4	millimeters	mm
ft	feet	0.305	meters	m
yd	yards	0.914	meters	m
mi	miles	1.61	kilometers	km
		AREA		
in^2	square inches	645.2	square millimeters	mm^2
ft^2	square feet	0.093	square meters	m^2
yd^2	square yards	0.836	square meters	m^2
ac	acres	0.405	hectares	ha
mi^2	square miles	2.59	square kilometers	km^2
		VOLUME		
fl oz	fluid ounces	29.57	milliliters	mL
gal	gallons	3.785	liters	L
ft^3	cubic feet	0.028	cubic meters	m^3
yd^3	cubic yards	0.765	cubic meters	m^3
NOTE: Volumes greater than 1000 l shall be shown in m^3.				
		MASS		
oz	ounces	28.35	grams	g
lb	pounds	0.454	kilograms	kg
T	short tons (2000 lb)	0.907	megagrams (or "metric ton")	Mg (or "t")
		TEMPERATURE (exact)		
°F	Fahrenheit temperature	5(F-32)/9 or (F-32)/1.8	Celcius temperature	°C
		ILLUMINATION		
fc	foot-candles	10.76	lux	lx
fl	foot-Lamberts	3.426	candela/m^2	cd/m^2
		FORCE and PRESSURE or STRESS		
lbf	poundforce	4.45	newtons	N
lbf/in^2	poundforce per square inch	6.89	kilopascals	kPa

APPROXIMATE CONVERSIONS FROM SI UNITS

Symbol	When You Know	Multiply By	To Find	Symbol
		LENGTH		
mm	millimeters	0.039	inches	in
m	meters	3.28	feet	ft
m	meters	1.09	yards	yd
km	kilometers	0.621	miles	mi
		AREA		
mm^2	square millimeters	0.0016	square inches	in^2
m^2	square meters	10.764	square feet	ft^2
m^2	square meters	1.195	square yards	yd^2
ha	hectares	2.47	acres	ac
km^2	square kilometers	0.386	square miles	mi^2
		VOLUME		
mL	milliliters	0.034	fluid ounces	fl oz
L	liters	0.264	gallons	gal
m^3	cubic meters	35.71	cubic feet	ft^3
m^3	cubic meters	1.307	cubic yards	yd^3
		MASS		
g	grams	0.035	ounces	oz
kg	kilograms	2.202	pounds	lb
Mg (or "t")	megagrams (or "metric ton")	1.103	short tons (2000 lb)	T
		TEMPERATURE (exact)		
°C	Celcius temperature	1.8C + 32	Fahrenheit temperature	°F
		ILLUMINATION		
lx	lux	0.0929	foot-candles	fc
cd/m^2	candela/m^2	0.2919	foot-Lamberts	fl
		FORCE and PRESSURE or STRESS		
N	newtons	0.225	poundforce	lbf
kPa	kilopascals	0.145	poundforce per square inch	lbf/in^2

* SI is the symbol for the International System of Units. Appropriate

(Revised September 1993)

TABLE OF CONTENTS

Page

Table of Contents vii
List of Tables xi
List of Figures xii
Executive Summary xiv

CHAPTER 1. INTRODUCTION 1
1.1 STATEMENT OF THE PROBLEM 1
1.2 TTU APPROACH 2
1.3 BACKGROUND 3
1.3.1 Typical TxDOT Bridge Design 3
1.3.2 Rapid Off-System Bridge Design Challenges 3
1.3.3 Typical Design Constraints 4
1.3.3.1 Site Location Factors 4
1.3.3.2 Site Characteristic Factors 4
1.3.3.3 Bridge Design Requirements 5
1.3.3.4 Concrete vs. Steel 5
1.4. TTU APPROACH 6
1.4.1 Substructure 6
1.4.2 Superstructure 6
1.4.3 Contracting 7
1.4.4 Ride Quality 8
1.4.5 Concrete vs. Steel 8
1.4.6 Top-Only Construction 8
1.4.7 Future Improvement 9
1.4.8 Summary 9

CHAPTER 2. SUBSTRUCTURE 10
2.1 GENERAL OVERVIEW 10
2.2 DRILLED SHAFTS 10
2.3 DRIVEN PILES 12
2.4 AUGER PILES 13
2.5 OTHER TYPES OF FOUNDATIONS 15
2.5.1 Minipiles 15
2.5.2 Screw Piles 19
2.5.3 Pressure Injected Footings 19
2.5.4 Drilled Soil Displacement Piles 22
2.5.5 Tubex Grout Injection Piles 24

TABLE OF CONTENTS (continued)

Chapter **Page**

CHAPTER 3. SUPERSTRUCTURE SYSTEMS 26
3.1 SLAB SPANS 26
3.2 CONCRETE PAN FORM SLAB AND GIRDER SYSTEMS 27
3.3 PRESTRESSED CONCRETE DECK PANELS 27
3.4 PRESTRESSED CONCRETE BOX BEAMS 28
3.5 PRESTRESSED CONCRETE DOUBLE TEE BEAMS 29
3.6 PRESTRESSED CONCRETE I-BEAMS 30
3.7 PRESTRESSED CONCRETE U-BEAMS 31
3.8 ROLLED STEEL I-BEAMS 31
3.9 PROPRIETARY/COMMERCIAL SYSTEMS 32
3.9.1 Introduction 32
3.9.2 Travel/Site Visits 32
3.9.3 Inverset® Bridge System 33
3.9.4 U.S. Bridge System 34
3.9.5 Steadfast Bridge System 35
3.9.6 Con/Span Bridge System 36
3.9.7 Bailey Bridge System 37
3.9.8 Other Systems 38
3.10 SUMMARY 38

CHAPTER 4. CONTRACTION STRATEGIES AND CONTRACTUALISSUES .41
4.1 GENERAL CONTACTION STRATEGIES 41
4.1.1 Construction of the New Bridge with an Offset 41
4.1.2 Construction of a Temporary Adjacent Bridge 41
4.1.3 Bridge Construction Using Low-Headroom Equipment 42
4.1.4 Construction in Periods of Low Traffic Volume 42
4.2 CONTRACTUAL ISSUES 43

CHAPTER 5. PROPOSED SUBSTRUCTURE SYSTEMS 45
5.1 INTRODUCTION 45
5.2 FACTORS INFLUENCING THE SUBSTRUCTURE DESIGN STRATEGY 45
5.2.1 Soil and Geologic Conditions 45
5.2.2 Site Location and Accessibility 46
5.2.3 Equipment Availability and Contractor Capability 47
5.2.4 Traffic Volumes and Potential Detour Routes 48
5.2.5 Required Loads 48

TABLE OF CONTENTS (continued)

Chapter **Page**

5.3. ALTERNATIVE SUBSTRUCTURE DESIGN AND CONSTRUCTION STRATEGIES 49
5.3.1 Overview 49
5.3.2 Foundation Systems 49
5.3.2.1 *Use of Special Low-Headroom Construction Method* 49
5.3.2.2 *Foundation Installation on Both Sides of the Existing Bridge* 50
5.3.3 Bridge Abutment and Wing Wall Construction 57
5.3.3.1 *Construction of Abutments While Keeping the Bridge Open to Traffic* 57
5.3.3.2 *Alternative Methods for Faster Construction of Abutments* 57
5.3.4 Bridge Pier Construction 60
5.3.4.1 *Use of Prefabricated Piles as Bridge Piers* 60
5.3.4.2 *Use of Prefabricated Box Piers* 61
5.3.4.3 *Conventional Cast-in-Place Construction* 61
5.3.5 Bent Cap Construction 64
5.4. SPECIFIC SUBSTRUCTURE DESIGNS FOR THE SELECTED 50-FOOT AND 90-FOOT SPAN BRIDGES 64
5.4.1 Construction of Abutments with Partial Bridge Closure 65
5.4.2 Construction of Abutments without Closure of the Old Bridge 66

CHAPTER 6. PROPOSED SUPERSTRUCT 68
6.1 INTRODUCTION 68
6.2 PRESTRESSED FULL-WIDTH, FULL-DEPTH DECK PANEL CONCEPT 69
6.2.1 Precast Panels 77
6.2.2 Panel/Beam Composite Action 77
6.2.3 Panel/Panel Transverse Joints 78
6.2.4 Ride Quality 78
6.2.5. Construction of the 50-foot Prototype Case 78
6.2.6. Construction of the 90-foot Prototype Case 79
6.2.7 Special Erection System for 90-foot Case 83
6.3 PRECAST, POST-TENSIONED CHANNEL BRIDGE CONCEPT 100
6.3.1 50-foot Prototype Case 100
6.3.2 90-foot Prototype Case 104

TABLE OF CONTENTS (continued)

Chapter **Page**

CHAPTER 7. SUMMARY, CONCLUSIONS, AND SUGGESTED FUTURE RESEARCH 107
7.1 SUMMARY 107
7.1.1 Background 107
7.1.2 Contractual Issues 107
7.1.3 Substructure Solutions 107
7.1.4 Superstructure Solutions 108
7.1.5 Other Issues 108
7.2 CONCLUSIONS 108
7.2.1 Substructure 108
7.2.2 Superstructure 109
7.3 SUGGESTED FUTURE RESEARCH 109

REFERENCES 112

APPENDIX A. Additional Information for Research Project 0-4375 ..... A-1

APPENDIX B. Unbonded Monostrand PT and Multi-Directional Connectors B-1

LIST OF TABLES

Table **Page**

1.1 Dimensional Parameters of the Two Prototype Bridges 2
2.1 Maximum Allowable Drilled Shaft Service Loads 12
2.2 Maximum Allowable Pile Service Loads 13
2.3 Alternative Foundation Systems 17, 18
3.1 Bridge Matrix 39, 40

LIST OF FIGURES

Figure		Page
2.1	Construction of an Auger Pile	14
2.2	Installation of an Auger Pile	14
2.3	Installation of an Minipiles from an Existing Bridge Foundation	16
2.4	Typical Construction Steps for a Minipile Installation	16
2.5	Screw Piles	20
2.6	Construction of a Pressure Injected Footing	21
2.7	Extracted Cased Shaft PIF with a 24" Base Diameter	22
2.8	Construction of a Drilled Soil Displacement Pile	23
2.9	Drilled Soil Displacement Cast-in-Place Pile Auger	24
3.1	Concrete Pan Form Slab and Girder System	27
3.2	Prestressed Concrete Deck Panels	28
3.3	Prestressed Concrete Box Beams	29
3.4	Prestressed Concrete Double Tee Beams	30
3.5	Prestressed Concrete I- Beams	30
3.6	Prestressed Concrete U-Beams	31
3.7	Rolled Steel I-Beams	32
3.8	Inverset® Precasting System	33
3.9	U.S. Bridge Truss and Beam Bridges	35
3.10	Steadfast Highway Bridges	36
3.11	Con/Span Bridge System	37
3.12	Cantilever Launch Concept	38
4.1	Use of a Temporary By-Pass Bridge during Bridge Construction	42
5.1	Use of Special Low-Headroom Equipment to Construct Pier Foundations	51
5.2	3-foot-wide, 3-foot-high Specialty Rig Drills Holes up to 18-inch Diameter and 20-foot Depth	52
5.3	5-foot 6-inch-wide, 6-foot 9-inch-high Specialty Rig Drills Holes up to 60-inch Diameter and 75-foot Depth	52
5.4	Special Vibratory Pile Driver for Low-Headroom Applications	53
5.5	Robotic Vibratory Pile Driver Attached to an Excavator	53
5.6	Use of Limited-Headroom Pile Drive in the Retrofit of Pier Foundations in the San Francisco-Oakland Bay Bridge	54
5.7	Installation of Additional Piles around Old Pile Cap	54
5.8	Retrofit of a Pier Foundation with Driven Piles	55
5.9	Construction of Foundations on the Sides of the Existing Bridge	56
5.10	Constructing Abutments while Keeping the Bridge Open to Traffic	58
5.11	Temporary Bridge in Use During Bridge Reconstruction	59
5.12	Use of Permanent Steel Sheet Pile Walls for a Bridge Abutment	60
5.13	Off-System Bridge on County Road 569 at Oyster Creek	61
5.14	Off-System Bridge on Hunt Road at Bessie's Creek	62
5.15	Prefabricated Pier Systems	63

LIST OF FIGURES (continued)

Figure **Page**

6.1 Conceptual Full-Width Prestressed Panel Deck (Before Closure Pour 71
6.2 Conceptual Full-Width Prestressed Panel Deck (Completed) 71
6.3 Completed Bridge Cross Section 72
6.4 The Prestressed Concrete I-Beam 72
6.5 Conceptual Shear Pocket with Shear and Leveling Screws 73
6.6 The Grouted Panel and Shear Keys 74
6.7 Details of Shear Pockets 75
6.8 The Underside of the Precast Concrete Panel 75
6.9 Transverse Shear Keys Between Panels 76
6.10 Stage I – Cambered Beam Before Panel Placement 80
6.11 Stage II – Beam with First Panel Placed 80
6.12 Stage III – Beam with All Panels Placed and Leveled 81
6.13 Stage IV – Beam with (Optional) Longitudinal Post-Tensioning 81
6.14 Stage V – Beam with Panels Grouted 82
6.15 The Completed Bridge 82
6.16 90-foot Clear Span Bridge Site 84
6.17 Detail of Proposed Erection System 86
6.18 Bridge Site with Crane and Erection Beams Ready to be Placed 87
6.19 Erection Beam Placement 88
6.20 Placed Erection Beams 89
6.21 Bridge Site with First Structural Beam Delivered 92
6.22 Structural Beam Placement 93
6.23 Beam Slider Details 94
6.24 Structural Beam Being Set in Place 95
6.25 Bridge with All Four Structural Beams Placed 96
6.26 Placement of First Precast Deck Panels from the Ground Level 97
6.27 Placement of Remaining Precast Deck Panels from the Deck Level 98
6.28 Bridge with the Precast Deck Panels and Barriers Placed 99
6.29 52-foot Shallow Channel Bridge (50-foot clear span) 101
6.30 52-foot Shallow Channel Bridge Rendering 103
6.31 92-foot Shallow Channel Bridge (90-foot clear span) 105
6.32 90-foot Shallow Channel Bridge Rendering 106

EXECUTIVE SUMMARY

The Texas Department of Transportation (TxDOT) seeks innovative design and construction methods for off-system bridges that will significantly reduce bridge closure times while maintaining the quality of construction and involving practical construction procedures. Statistics regarding such bridges in need of replacement indicate that the majority are single spans over a stream, have a narrow (24-foot-wide) roadway, and a small right of way. There are variations, however, in whether there may be access to the streambed by construction equipment, whether maintaining the hydraulic profile is critical, and how far the site is from resources such as precast plants and equipment rental companies. After considering the variables involved, TxDOT has specified that designs and construction schemes be directed toward two prototype cases, both with 24-foot-wide roadways and single spans: a 50-foot clear span with access to the streambed and a 90-foot clear span without access to the streambed.

The Texas Tech University (TTU) research team has reviewed existing solutions to both the substructure and superstructure design of off-system bridges, including both standard TxDOT approaches and innovative state-of-the-art proprietary/commercial approaches. Also, several contracting issues pertinent to the problem have been addressed, especially a need for the prospect of other similar work in the future if a contractor is to invest in the equipment and training needed for an innovative method. Because of the strong dependence of the substructure on site conditions, no single substructure design is recommended, although several approaches are discussed in detail that would not require the bridge to be taken out of service until the final abutments are installed. In contrast, two specific innovative superstructure designs with related construction schemes are presented that satisfy requirements for both the 50- and 90-foot prototype cases. One is a full-width, full-depth precast deck panel design in which the panels are attached to traditional precast concrete or steel I-beams with new types of multi-directional shear and leveling screws. For either the 50- or 90-foot span, this system requires only one or two small (30-ton or smaller) cranes, involves construction work only from the top of the bridge, and is expected to require only one or two days of bridge closure. For the 90-foot span without streambed access the proposed solution will require specially designed erection beams and sliders. The second superstructure scheme is an adaptation of the channel bridge by consultants Jean Muller and Daniel Tassin. For the 50-foot span, this design will have quite shallow edge members that will provide excellent aesthetics and a superior hydraulic profile, although it will require a larger crane and higher costs than for the first design. For the 90-foot span, the post-tensioned edge members of the channel bridge design will be deeper than the 50-foot span case and will also act as barriers.

CHAPTER 1

INTRODUCTION

1.1 STATEMENT OF THE PROBLEM

The Texas Department of Transportation (TxDOT) desires to help Texas counties, cities, and other owners of deficient or outdated "off-system" bridges to replace many of them over the next several years. "Off-system" bridges are those which TxDOT does not have ownership or responsibility for their maintenance. Still, the owners typically require TxDOT to assist in their design and construction, as well as in their financing to a certain extent. A three-way partnership between the federal government, the State of Texas, and the local owner is generally established to pay for the new bridge. While cost is always an important consideration, the inconvenience caused to the traveling public by having a bridge out for replacement is a growing and sometimes crucial concern. Many of the bridges in need of replacement are in rural or remote areas where the required detour is quite long. In some cases an area will even be landlocked, that is, unreachable by road, for any time that the waterway or other obstruction spanned by the bridge is impassable. Thus, TxDOT seeks innovative design and/or construction methods for the replacement of off-system bridges in Texas that will significantly minimize this outage time and still restrain costs.

Statistics concerning the off-system bridges in need of replacement have been compiled by TxDOT and are presented in Appendix A. There are many factors affecting the design and construction of a bridge that can come into play, so that no one solution will be appropriate in every situation. These factors are discussed in some detail later in this chapter. However, there are several common factors that should be kept in mind for all of the bridges considered in this study. One is the fact that contracting issues can often have a large impact on the outage time due to construction. If enough financial incentives are offered in the contract and the contractor is able to mobilize sufficient resources (workmen and equipment), then he or she can "get in and get out" quickly and still perform a quality job that will allow the owner to "stay out." Another fact is that if time is a major concern then demolition of the old bridge may be accomplished quickly - perhaps even with explosives - so that the critical replacement time involves primarily only construction of the new bridge.

Another factor to consider is that the roadway approaching a bridge in this study generally will be narrow. The right of way will be narrow as well. Further, little surface elevation change can typically be accommodated by the approaches. Maintaining the existing hydraulic profile of the bridge may be essential. Finally, access by heavy equipment may be restricted.

The methods developed in this study consider both the substructure and the superstructure and both materials and construction methods. To accomplish the desired speed of construction, prefabricated elements of one or more types are required for the superstructure. However, the challenge is to design each element so that it has a workable mode of installation. In addition, the resulting quality of construction must be acceptable.

There are perhaps fewer options regarding the substructure methods as TxDOT desires that shallow foundations be avoided. Basic substructure options, other than shallow foundations, are drilled piers and piles. These options are discussed in Chapter 2 of this report.

After consideration of the many variables that can affect the proposed methods, TxDOT has narrowed the scope of the project to the design of two prototype cases. Both cases consider a 24-foot roadway, a typical width of existing rural roads, with a single span over a streambed, not over another road or other obstruction. As shown in Table 1.1, one prototype case is for a 50-foot clear span with access of equipment in the streambed allowed, and the other case is for up to a 90-foot clear span without access of equipment in the streambed. In some such examples, the approaching road is even a dirt road, so the ride quality of the bridge generally is not of great importance. Thus, the solutions presented in this report consider ride quality as secondary in importance. Nevertheless, an overlay may be applied to the deck in cases where ride quality may be in need of improvement. Another assumed condition is that the existing bridge may not be able to support heavy construction equipment. In all cases, the bridges are to be designed for a minimum AASHTO HS-20 loading.

Table 1.1 Dimensional Parameters of the Two Prototype Bridges

Parameter Set	Full Bridge Length (feet)	Clear Span (feet)	Full Bridge Width (feet)	Roadway Width (feet)
1	52.0	50.0	26.0*	24.0
2	92.0	90.0	26.0*	24.0

* A larger out-to-out width is required for the *shallow-channel* bridge option proposed. See Chapter 6.

1.2 TTU APPROACH

The Texas Tech research team has approached this study in the following way. First, the variables that can affect the design of any highway bridge were considered. These variables include span length, number of spans, roadway width, right of way width, design loading, soil conditions, streambed access, heavy equipment access, hydraulic profile, proximity to a concrete plant, proximity to a prefabrication plant, availability of equipment, and local material, labor, and equipment rental costs. Next, candidate substructure and superstructure systems were investigated, including standard TxDOT systems and "innovative" or specialized systems developed or proposed by various companies or agencies. This investigation included trips for interviews with TxDOT and other bridge designers, conversations with construction industry personnel, and inspection of in-place bridges and fabrication facilities. The different substructure and superstructure systems were then evaluated in a matrix versus the variables previously mentioned in an effort to see which would be advantageous in various circumstances. These systems are discussed in this report in two groups: standard TxDOT systems and commercial/proprietary systems. Next, a proposed, conceptual system was developed. It includes a preferred method of installation of the substructure, one that will not require the existing bridge to be taken out of service until just before final abutments are installed, and a preferred superstructure system, one that will

be applicable to any span, but which will have a special method of installation for the case of long (up to 90-foot) spans without streambed access.

1.3 BACKGROUND

1.3.1 Typical TxDOT Bridge Design

The Texas Department of Transportation has designed highway bridges for many years with primary considerations of safety, durability, and cost. Despite the many variables that can affect the design of a specific bridge, a few basic types of construction have dominated the designs of recent years. For the substructure, most bridges have had either concrete piles or drilled piers, while for the superstructure most bridges have had cast-in-place (CIP) decks, typically over partial-depth precast concrete panels and concrete or steel I- or U-beams.

1.3.2 Rapid Off-System Bridge Design Challenges

A recent National Bridge Inspection Survey (see Appendix A) provides data for functionally obsolete and deficient bridges in Texas. Most of these bridges are over water, have only a 24-foot roadway, and are single-span units. Many of these bridges which are of particular interest to this research project do not have one of the typical TxDOT designs described in the previous paragraph. Although access of cranes and other equipment to the site in general, and to the streambed in particular, is not indicated in the NBIS survey, such access is an additional concern for the rural and remote cases of particular interest to this research project.

With a major effort in mind to replace as many of the functionally obsolete and deficient bridges as possible in the next few years, TxDOT is interested in not only maintaining or improving its bridges in terms of cost, durability, and safety, but in adding the element of reduced closure time.

The total time of work on the job is not necessarily critical. It is the length of time that the bridge is impassable that must be kept to a minimum, which leads to the consideration of innovative design concepts and construction methods. Rapid replacement procedures have been implemented successfully in heavily populated areas such as Dallas and Houston with the help of significant economic incentives and the mobilization of much equipment and manpower. Such contracting factors may also be important for the bridges of interest in this study. However, for these bridges there may not be as much incentive for rapid replacement from a high average daily travel (ADT) count as in metropolitan areas. Instead, the bridges of current interest may need rapid replacement because of the length of the detour, the possibility of producing a land-locked area, and the need to maintain emergency service and school bus access. The aim of this study is to develop a bridge design and associated construction method that will maintain the durability and safety of the bridges, minimize the closure time, and hold the cost to a reasonable value.

1.3.3 Typical Design Constraints

Constraints that must be satisfied in the design of an arbitrary bridge may be categorized into those dictated by:

- site location,
- site characteristics, and
- bridge requirements.

Obviously, there are interactions between the above categories. Each category is discussed in more detail in the following subsections.

1.3.3.1 Site Location Factors

Site location factors depend on the overall transportation system of which a bridge is a part, and the particular role of the bridge in that system. While the bridge is out of service, should a detour around it be not too distant, the need for rapid replacement is not great. In contrast, should an area become completely landlocked while a given bridge is out of service, then a significant need for rapid bridge replacement typically exists. For a landlocked area, there are possible matters of life and death in cases where emergency vehicles cannot reach the area, and even the need for school bus access can be a major concern. Timing a replacement so that it is completed when school is not in session is a common practice. However, emergency types of service can be required at any time. For example, helicopter support is available in some cases for medical emergencies as a temporary replacement for ambulance service. However, fire truck access is difficult to replace with anything other than a completed roadway.

Another component of the influence of the site location on an off-system bridge design is the proximity of the bridge to construction support elements. These elements include companies offering services such as crane or drilling rig rental and concrete delivery. Many off-system bridge sites are not near such establishments. In addition, the site location influences the amount of rainfall and, therefore, the hydraulic profile for which the bridge must be designed. Typically, off-system bridges are not designed for 50- or 100-year storms. Thus, the resulting hydraulic profile of the bridge can become critical.

1.3.3.2 Site Characteristic Factors

There are many characteristics of a particular bridge site that can affect the design of the bridge. For a stream crossing, the width, depth, and profile of the bed are very important, not only in determining the length and number of spans, but also in determining the required hydraulic profile. In many locations along the coast of Texas, maintaining or even increasing the hydraulic profile is of great importance, so the depth of the bridge section must be kept to a minimum. In some cases, overtopping of the bridge cannot be avoided even with the most shallow possible structural depth. An open railing typically is required to keep the overtopping flow from being impeded. Finally, the streambed configuration can affect the type of substructure equipment that might be used for installing piles or drilling shafts; only low-clearance equipment may be usable in some cases, while in other cases even such specialized equipment would require more than the actual amount of available clearance. Still, in other off-system cases, ample clearance may be available.

In many cases, the types of surface soil, vegetation, and wildlife at the site and their sensitivity to disturbance may come into play in terms of whether or not any equipment may be positioned in the streambed. This access and other types of limitations can significantly affect the construction of the bridge.

Other site characteristic factors include subsurface soil properties and existing road characteristics. Closely related to the streambed surface soil are the subsurface soil properties at the site. These properties strongly affect the type of substructure to be used, the equipment that can be employed, and the time of installation. In addition, the existing road for which the bridge is designed can have a number of different characteristics affecting the design. The ADT, number of existing lanes, existing lane widths, skew angle, right of way of the approaches, and geometry of the approach side slopes can all play a role in the final design.

1.3.3.3 Bridge Design Requirements

Several bridge requirements also affect its design, including the design loading, the needed lane widths, the desired shoulder width, the type of railing, and the desired ride quality. In general, off-system bridges require a minimum AASHTO HS-20 (or HL-93) design load. Overload and wide-permit loads are common on such structures. Thus, roadway width, railing height, and capacity of the railing are important design constraints. As discussed previously, ride quality typically is not a major concern for off-system bridges. However, in some cases, it can be of importance.

Regardless of other design issues, the bridge must be cost–effective, safe and durable. In addition, as has now been characterized by many, the public wants those responsible for the bridge replacement to "get in," "get out," and "stay out."

To accomplish the above goals economically is challenging. For durability, ride quality, etc., a more massive structure (e.g., concrete) is generally desirable. However, for ease of placement (or replacement), a less massive structure (e.g., steel) is generally desirable.

In many ways, the solution to the many given design requirements for the rapid replacement of off-system bridges may require more innovations in the construction procedures implemented and the contracting language used in the construction documents than on the structural solutions chosen. Construction issues are addressed throughout this report, but are particularly discussed in Chapters 2 and 6. Contracting issues are addressed briefly in Chapter 4. Still, an innovative structural solution, presented in Chapter 6, is required for the combined design conditions of the two prototype off-system bridges.

1.3.3.4 Concrete vs. Steel

Today, for short- to average-sized bridges, precast concrete appears to have an economic edge over steel bridges, although this may not always be the case. Precast concrete components increasingly are being used on bridge projects around the world. Although precast columns, I-beams, and even partial-depth deck panels have been used for some time, precast bent caps and full-width, full-depth concrete deck panels are relatively new precast

components. This research has investigated both steel and concrete components. However, the focus has been on concrete solutions as they appear to better match the numerous design constraints present in off-system bridge situations.

1.4 TTU APPROACH

Researchers at Texas Tech University have taken the following approaches towards the off-system bridge project.

1.4.1 Substructure

Many of the issues involved with the substructure design are site specific and are therefore difficult to address in a general fashion. Nevertheless, innovative substructure and foundation solutions often have the most potential for reducing overall costs. Results from a fairly exhaustive inquiry into present and future foundational substructure improvements are presented. Additional work in this direction is warranted. However, as precast technology for bridge foundation components is now well known (e.g., piles, columns, templates, bent caps, etc.) and potential improvements are generally site specific, TTU researchers have not focused on choosing or developing an optimal foundation strategy. Instead, it is assumed that the foundation strategy chosen will satisfy the following goals:

- Minimize lane closures,
- Minimize lane width reductions during construction,
- Maximize activities outside the roadway lanes and shoulders,
- Perform required work under lanes at night and have the work covered for traffic by the morning, and
- Strive to have new abutments ready for beam placement with no more than one day of total bridge shutdown.

It may not be possible to satisfy all of the above aims on every bridge project. However, each remains as a specific goal. Potential solutions are presented in Chapter 2. More substructure studies are warranted once particular sites are determined and specific soil properties and conditions are obtained.

1.4.2 Superstructure

Although precasting of the substructure is desirable, precasting alone will not lead to the construction time savings required for off-system bridges. The single portion of the modern highway bridge construction process having the most potential for time reduction is placement of the cast-in-place concrete deck. Thus, the TTU approach for this research project has been to concentrate on the superstructure design and to determine a method that will replace the C.I.P. deck pour with full-roadway-width, full-depth concrete deck panels.

The TTU approach to the superstructure is twofold. The first superstructure solution is a relatively simple extension beyond the current partial-depth precast concrete panels, i.e., full-depth precast panels. The acronym for this solution is "PCP_{ffwd}", meaning precast concrete panels utilizing fast-construction and full-width and depth panels. The approach is to eliminate almost all activity below the bridge deck (i.e., to have top-only construction), to

make the bridge as durable as possible, and to open the bridge to traffic as soon as possible. The goal is to complete the bridge deck construction in less than one day, given strict equipment size, equipment access, and cost constraints.

For the 50-foot span case, the innovations are primarily in the panel-to-beam connections and in using an optional unbonded, ungrouted longitudinal post-tensioning system. For the 90-foot span case, another innovation is in the construction method.

The second TTU solution has been developed with significant input from two leading international bridge engineers, Mr. Jean Muller of Paris, France, and Mr. Daniel Tassin of International Bridge Technologies of San Diego, CA. For the 50-foot span, the design is for a shallow depth version of the patented channel bridge.[1] For the 90-foot span, the design is essentially the channel bridge with some changes to meet the particular off-system bridge requirements.

As will be discussed, both of these superstructure solutions utilize a full-width full-depth precast deck. Both of these options are discussed extensively in Chapter 6.

1.4.3 Contracting

Although no particular solution has been identified concerning contracting issues, several critical concerns have been identified. For example, for a contractor to spend significant funds for new equipment, skilled labor, etc., to substantially shorten the bridge construction time, incentives are required. For off-system bridges, these incentives typically do not exist. Also, as the ADT counts for these bridges are typically among the lowest in the state, such incentives are not likely to occur. In some cases, TxDOT has grouped several bridges together into a single letting with the hope that economies of scale will accrue for the contractor. This approach has generally been successful in reducing the cost, but it has rarely saved significant amounts of construction time.[2]

The approach adopted by TTU researchers assumes that TxDOT will group a number of similar bridges in a single letting, with the requirement that the road be completely closed no more than seven days. TxDOT must realize that the cost of the bridge on a deck square footage basis will increase substantially. The payback will be a reduction of bridge closure time from (sometimes) 60 days to 7 days (or less). Consequently, there must be strong penalties for exceeding the seven days and significant bonuses for early completion. By creating an expectation in the contractor that similar future contracts will also be let, TxDOT could create an incentive for innovation, including the purchasing and/or manufacturing of new equipment.

In the solutions presented in this report, it is not assumed that a large amount of additional money will become available so that the cost per square foot of a bridge deck can increase without bound. However, it is assumed that the cost per square foot of bridge deck must increase somewhat, or construction time savings simply will not occur. Thus, the

---

[1] Patented by Mr. Jean Muller of Paris, France.

[2] A number of the contracting issues presented in this report were identified by Jim Abrams, Jr. of Austin Prestressed, Austin, Texas.

solutions presented in this report assume that the contractor directly, and the precast yard indirectly, have been given sufficient incentives through the contract documents to deviate from the current method of construction. The new method will become one that is an order of magnitude faster to construct in the field and substantially more durable than the current state of practice. In addition, rapid replacement of this new deck system will also be a design challenge.

1.4.4 Ride Quality

For most bridge deck construction, final ride quality is one of the most important issues in any design criteria. However, for off-system bridges this is not always the case. Many times an off-system bridge is met by unpaved roads on either side. Thus, the typically rough ride quality of a precast deck without an overlay may be acceptable for many off-system bridges.

Additionally, many of the off-system bridges have very low ADT counts. Thus, even if the bridge were completed in the winter with only precast deck panels, it would not be too inconvenient to delay application of a seal coat and/or an overlay for a better ride quality until the summer months.

The TTU approach is that the ride quality from properly placed full-depth, full-width precast concrete panels will be sufficient for off-system bridges, at least initially. Should an improved ride quality be desired at a later date, it can be provided with the proper application of a seal coat and either an asphaltic or concrete overlay. Following this approach will not delay the opening of the bridge.

1.4.5 Concrete vs. Steel

The seemingly age-old question as to the "best" structural material, concrete or steel, will not be answered in this report. Some of the major drawbacks to concrete are its time-dependent effects, weight, possible lack of inspectibility, and difficulty in repair. The major benefits of concrete are its low cost, durability, ease of fabrication of varying shapes, mild response to thermal gradient effects, relatively good damping qualities, and its resistance to fatigue. Conversely, the major benefits of steel are its light weight, lack of substantial time dependent response, and relative ease of inspection and repair. Drawbacks to steel include its expense, lead time required for fabrication, somewhat inferior damping characteristics, fatigue issues, and its susceptibility to weather.

Rarely is a bridge built completely out of steel. The supporting girders may be steel, but the decks are almost always concrete. Similarly, concrete bridges, practically without exception, contain extensive amounts of mild and prestressing steel. Nevertheless, except for selected localities in the United States, prestressed concrete bridges currently have become the material of choice for short to medium sized bridges. (See Appendix A for National Bridge Inspection, NBI, and data on Texas bridges.)

Usually when a bridge has a very long and/or curved span, steel girders are used. Otherwise concrete girders typically are selected. Thus, for short to medium sized bridges, such as the off-system bridges of concern in this project, concrete girders are more likely to

be used. Should the weight of the concrete girders exceed the capacity of the available equipment, then steel girders typically will be selected. The first superstructure solution presented in this report (i.e., the full-width, full-depth panels) is illustrated with concrete girders, as these are the more massive and the more difficult units to place. Steel girders can also be used, resulting in reduced required equipment sizes.

1.4.6 Top-Only Construction

In addition to previously discussed design objectives, efforts have been made in the proposed TTU systems to develop solutions requiring little or no work below the bridge deck. This "top-only" construction goal could be a requirement for some actual site conditions. Although this goal results in a more complex design, it should speed construction of the superstructure.

1.4.7 Future Improvement

This research has documented foundation and contracting issues as well as superstructure design and construction issues. Future research is warranted in both of the former areas. Concerning the second superstructure system presented, the proposed channel section, it may be desirable to investigate additional construction methods, railing types, walkway widths, and repair methods. In addition, the full-width, full-depth panel solution that is presented does not necessarily consider future deck removal. A beneficial future design objective is to have the eventual deck removal to be almost as fast as the initial deck placement.

1.4.8 Summary

Many additional improvements are possible. Several of the more important foundation and contractual issues are discussed in this report. Current states of practice for bridge solutions are presented. Two fairly detailed innovative superstructure/construction approaches are proposed and discussed. Continued investigation into these and other related topics appears warranted.

CHAPTER 2

SUBSTRUCTURE SYSTEMS

2.1 GENERAL OVERVIEW

The foundation systems used to support bridge structures are broadly classified as "shallow" and "deep." Shallow foundations transmit structural loads to near-surface soils or rock, while deep foundations transmit some or all loads to deeper soil or rock formations. The choice of the most appropriate type of foundation depends on a number of factors. Among them are: a) site conditions, b) subsurface conditions, c) design loads, d) constructability, e) reliability, f) cost, g) local contractor capability, h) availability of materials, equipment and expertise, i) local experience and precedent, and j) construction efficiency. In addition, the selection of a foundation type for a bridge structure is typically controlled by allowable settlements, where differential settlements must be minimized.

Shallow foundation systems typically include spread footing foundations and mat foundations. Shallow foundations are rarely used by TxDOT for bridge support. This fact is primarily due to concerns with respect to scour, erosion, lateral stability, and heaving or shrinkage due to moisture fluctuations in the founding material. There are isolated projects where shallow foundations have been used by TxDOT; however, past performance has not been good. Current TxDOT foundation design guidelines generally limit the use of spread footing foundations to solid nonerodible rock.

Differential settlements are typically better controlled through the use of deep foundations. There are many different deep foundation options available for bridge supports. They include drilled shafts, driven piles, augered piles, minipiles, screwpiles, pressure injected footings, and drilled soil displacement piles. Among these, drilled shafts and driven piles are most common in TxDOT bridge construction.

Both standard and specialized substructure systems are reviewed in this chapter to provide a background for this study.

2.2 DRILLED SHAFTS

A drilled shaft is a machine-excavated circular hole in soil or rock filled with concrete and reinforcing steel to support the loads from the bridge. The shafts are sometimes socketed in rock. Drilled shafts may be used in groups to support footings or pier caps or singly to support a column or bridge pier. During excavation of the hole, either a steel casing or drilling slurry may be used to stabilize and support the edge material. TxDOT typically constructs straight shafts; however, shafts with under-reamed tips or bells are sometimes used.

Drilled shafts are the most widely used foundation system in TxDOT bridge construction and currently are the preferred foundation system except where soft soil conditions are found. Thus they predominate in most regions in Texas, with the exception of the coastal plains (the Gulf Coast region). TxDOT's experience with different types of foundation systems indicates that in many design situations that require higher load capacities, drilled shafts offer the best economy and reliability. More specifically, the cost of mobilizing and demobilizing a drilling rig is often much less than that of a pile driver. The drilled shaft equipment can penetrate soils with cobbles, boulders, and many types of bedrock. Also, drilled shafts allow changes in the length or diameter of the shaft to compensate for unanticipated soil conditions or changes in the design loads. Another significant advantage is that the construction process generates much less noise and vibration when compared to the pile driving option.

Drilled shafts are best suited for firm to hard, stable soils or rock where the hole will stand open during the drilling process. Conditions that should be carefully considered when selecting drilled shafts are high ground water and the presence of soft overlying soils. These conditions commonly require casing or slurry construction techniques during drilling, which can significantly increase the cost and time of construction. Careful monitoring during construction is also required to ensure a quality product.

Successful construction of drilled shafts is also very dependent on a contractor's skill and experience. Of special concern is the squeezing or caving in of the hole that can result in a defective shaft that is not capable of supporting the design load. At the present time, however, there appears to be a general consensus that these concerns have been addressed satisfactorily through numerous research studies and improvements in drilled shaft construction technology. It is expected that in the near future, as the technology and the AASHTO LRFD code evolve, instrumentation and methods for qualifying and quantifying the integrity of drilled shafts will become more economical and commonplace.

One limitation in drilled shaft construction is that the drilling equipment traditionally used requires a much larger vertical clearance than what may be available underneath an existing bridge. Also, typically a significant amount of headroom is needed to insert the reinforcing cage into the already completed shaft hole. These limitations can be overcome by using specialized construction equipment. Low overhead and limited access augers are examples of such specialized equipment. However, the availability of such equipment to a contractor in a particular off-system bridge region and the economics associated with its use will vary, dependent on the site location.

Another limitation in drilled shaft construction that may have a negative influence on project construction time is the setting and curing time required for the concrete. Once concrete has been poured into a shaft, there are minimum setting/curing times during which drilling and/or other construction operations in close proximity to the shaft must be avoided. The two- to four-day delay incurred as a result of this requirement is not a major concern in most construction projects. However, this delay may have an impact in a situation in which the bridge construction must be completed in a matter of days or weeks. As will be

discussed later, the TTU approach will be to perform such operations without closing the bridge.

Drilled shafts may carry loads in point bearing or in a combination of point bearing and skin friction. Drilled shafts may be designed to resist axial loads in tension or compression, as well as lateral loads or any combination of these. The selection of a shaft size (diameter) and length is typically based on site and project specific subsurface conditions and structural requirements. Table 2.1 presents the maximum recommended structural loads (in compression) for various drilled shaft sizes used in TxDOT practice (TxDOT Geotechnical Manual, 2000).

Table 2.1 Maximum Allowable Drilled Shaft Service Loads

Diameter (inches)	Maximum Load (tons)
30	275
36	400
42	525
48	700
54	900
60	1100

2.3 DRIVEN PILES

Pile foundations consist of long, slender, pre-fabricated structural elements driven into the ground. Piles are made of wood (timber), steel, concrete, or composites. Piles are generally considered to be the best foundation system where soft soil conditions and/or high ground water levels are present. Piles are used extensively within TxDOT for bridge foundations in the Texas Gulf Coast region. Prestressed concrete and steel piles are most commonly used on TxDOT bridge construction projects. The most common steel piling used by TxDOT includes metal shell or pipe piles and H piles (HP sections).

A few decades ago, driven piles were the deep foundation solution of choice among bridge designers. Although they are still used quite frequently, driven piles have lost their dominance in bridge construction applications. The shift is largely attributed to changes in design code requirements for foundation scour and extreme events (e.g., earthquakes). Hydrologic and hydraulic studies of scour have often produced design requirements for pile penetration that cannot be achieved economically. Similarly, when the foundation system must be designed to resist the large lateral loads associated with extreme events, piles are generally not the most cost effective foundation solution.

Since a pile foundation system primarily consists of prefabricated units, driven piles may offer an advantage in terms of greater construction speed in certain instances. The advantages of concrete piles include the ability to prestress the piles, close quality control monitoring during the manufacturing process, elimination of construction delays for concrete

curing onsite, and the ability to inspect the piles onsite prior to driving. Also, long experience in the Texas Gulf Coast region has provided reliable performance and accurate predictions of the needed sizes and lengths of concrete piles. For steel piles the main advantage is faster driving while the main disadvantage is greater cost.

Another factor is that the cost of mobilizing and demobilizing a pile driving rig is typically more expensive than mobilizing for other bridge foundation options such as drilled shafts. This disadvantage is certainly the case for smaller projects in remote locations, the conditions typical of off-system bridge construction. Noise, vibrations, and air pollution can also cause problems with pile driving operations. These problems are predominantly of concern in urban areas where existing structures are present and environmental sensitivities are an issue. Additionally, if subsurface materials such as cobbles, boulders, rock, or very dense sands are anticipated above the required pile penetration level, hard driving conditions may lead to pile damage with certain types of piles. These conditions may also require a pile to be stopped before sufficient pile capacity is developed, which may necessitate adding piles and/or redesigning the foundation. These problems can lead to delays in the construction schedule as well as increased project costs.

Piling may be designed to resist axial loads in tension or compression, as well as lateral loads or any combination of these. Driven piles may carry loads in point bearing or a combination of point bearing and skin friction. The selection of a pile size, material and length is typically based on site and project specific subsurface conditions, as well as on structural and handling requirements. Table 2.2 presents the maximum recommended lengths and structural loads (in compression) for various pile sizes used in TxDOT practice (TxDOT Geotechnical Manual, 2000).

Table 2.2 Maximum Allowable Pile Service Loads

Diameter Size (inches)	Max. Length (feet)	Abutments & Trestle Bents (tons/pile)	Footings (ton/pile)
14 & 15	80	60	100
16	85	75	125
18	95	90	175
20	105	110	225
24	125	140	300

2.4 AUGER PILES

Augered cast-in-place piles (ACIP) or auger pile foundations have become increasingly popular among foundation designers in recent times because of their potential for faster construction rates and the greater economy that they offer. In the construction of an auger pile, a hollow-stem, continuous-flight auger is used to drill a hole to the specified pile depth. A fluid cement grout is then injected through the hollow stem as the auger is gradually withdrawn. After the auger reaches the ground surface, the pile may be reinforced by placing a steel cage into the grouted hole. Otherwise, single rebars may be placed through

the hollow stem before grouting. Figure 2.1 shows a schematic representation of this construction process. In Steps 1 and 2, a hollow-stem auger is used to drill to the required depth. In Step 3, the auger is withdrawn while injecting cement grout. In Step 4 reinforcing steel is installed (optional). Figure 2.2 shows the equipment used to install an auger pile.

Auger piles can be designed to resist loads in compression, tension, or lateral load conditions, and they have been used for compressive design loads of up to 125 tons. They are typically installed in standard auger diameters which range from 12 to36 inches.

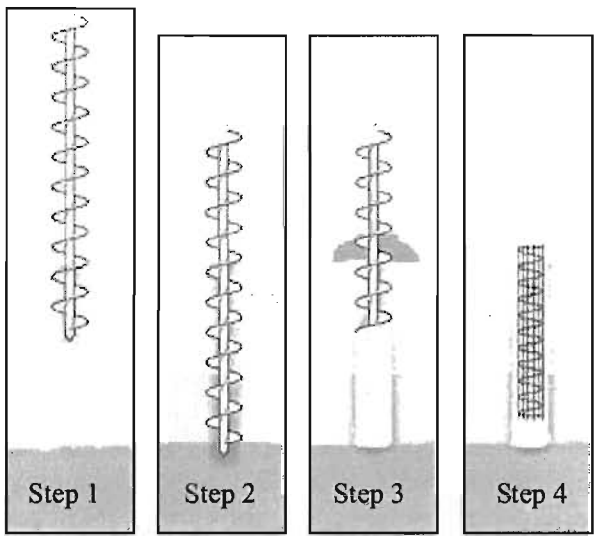

Figure 2.1 Construction of an Auger Pile

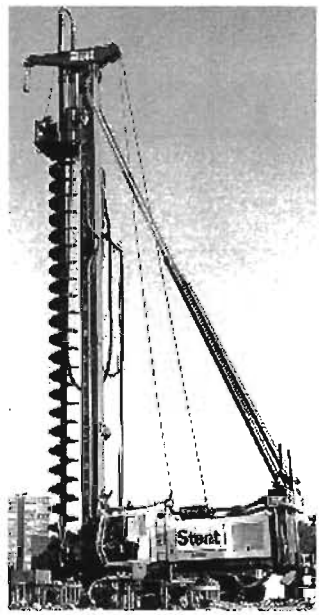

Figure 2.2 Installation of an Auger Pile

Auger piles offer many advantages over the more conventional driven pile and drilled shaft foundation options for bridge construction. Among these advantages are:

- The ability to install the piles in low headroom (less than 10 feet) or limited access conditions.
- No vibrations or pile hammer noise during construction.
- The potential for a more economical solution versus conventional TxDOT foundation support options.
- High production rates.
- Availability of ASTM procedures for static testing laterally or in compression or tension.

Disadvantages of auger pile construction include:

- The cost of mobilization and demobilization may be high because the equipment is specialized and may not be readily available in all areas of the state.
- The installation method does not lend itself to close visual inspection during construction for the purpose of quality control.
- Auger piles may not be a viable option for smaller off-system bridge projects and for those located in remote areas.

TxDOT has recently completed a 4-year research study to investigate the feasibility of using this type of foundation in TxDOT construction. While recognizing many of the advantages that this type of foundation offers, the study emphasized the need for contractor experience and careful quality control during construction.

2.5 OTHER TYPES OF FOUNDATIONS

Although not used in TxDOT construction at the present time, there are several alternative foundation systems that deserve consideration for use in off-system bridge projects. They include minipiles, screw piles, pressure injected footings, drilled soil displacement piles, and Tubex grout injection piles. A detailed description of each foundation system is presented below. In addition, a brief summary of these alternative foundation systems is presented in Table 2.3.

2.5.1 Minipiles

Minipiles, which are also known as micropiles, pin piles, needle piles, or root piles, are small-diameter friction and/or end-bearing elements that can be installed in almost any type of ground where piles are required. Underpinning of settling or deteriorating foundations and support of footings for increased capacity are prime candidates for minipile installation, particularly where headroom is limited or access is restricted. Figure 2.3 shows the installation of minipiles for an existing bridge pier foundation.

Selection of the correct minipile to meet design objectives is primarily a function of soil conditions and load transfer requirements. Minipiles may be drilled or driven into place, and they typically consist of heavy-walled steel pipe, tubing, or casing ranging in diameter from 5 inches to 12 inches. The piles are usually installed in conjunction with some type of

grouting or other ground modification technique. Reinforcing elements may include high strength steel bars, pipe, or tubing. The casing may be left in place or withdrawn after grouting. Figure 2.4 presents a schematic representation of the construction process for one type of minipile.

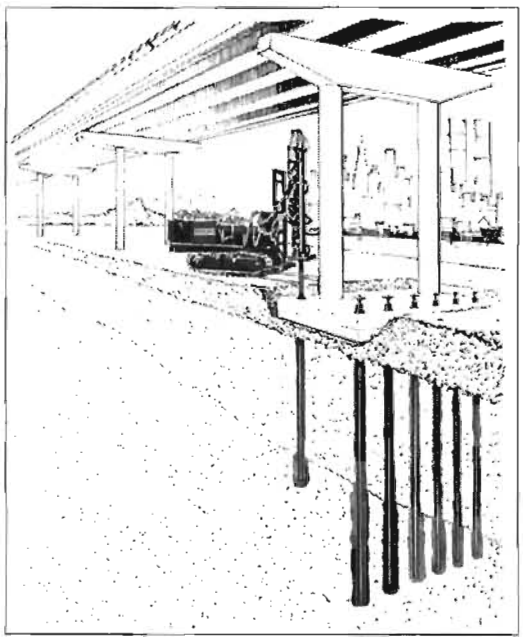

Figure 2.3 Installation of Minipiles for an Existing Bridge Foundation
(Source: Nicholson Construction Company; www.nicholson-rodio.com/services/pinpiles.pdf)

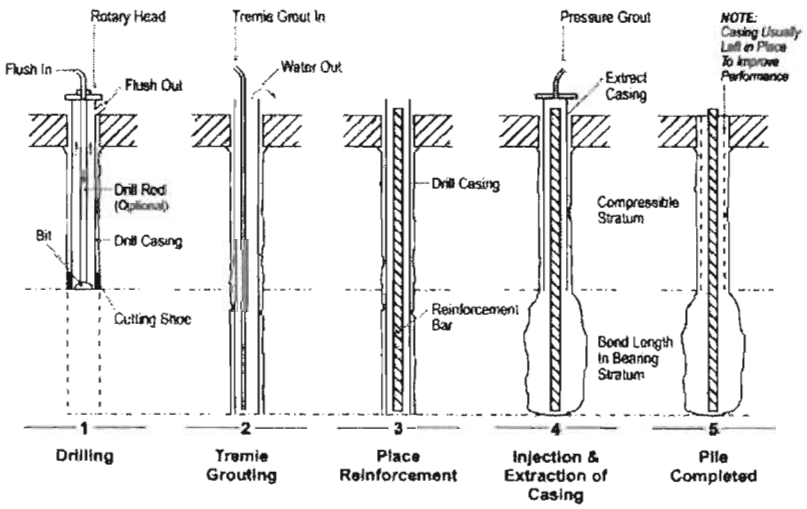

Figure 2.4 Typical Construction Steps for Minipile Installation
(Source: Nicholson Construction Company; www.nicholson-rodio.com/services/pinpiles.pdf)

Table 2.3 Alternative Foundation Systems

Type of Foundation	Brief Description	Sizes	Load Capacities
Minipiles/ Micropiles	Minipiles (or micropiles) are commonly used for underpinning of settling or deteriorating foundations, and support of footings for increased capacity. These are commonly used where headroom is limited or access restricted.	Minipile diameters are typically less than 12 inches	Ultimate loads are typically in the 50-250 kip range.
Screw Piles	This foundation technology appears to be more widely used in Australia than in other countries. Screw piles are screwed into the ground using a hydraulic rotator attached to earth moving equipment such as excavators and bobcats. The special advantages they offer include: fast installation (a few minutes/pile), minimum environmental disturbance (no spoil), and noise- and vibration-free installation procedures.	Screw piles of lengths up to 100 feet have been used.	The capacity of screw piles can go up to about 250 kips.
Pressure Injected Footings (PIF)	A PIF is a foundation comprised of a cast-in-place (CIP) shaft with an enlarged base that is formed by ramming concrete into the soil using a drop hammer. This process can compact the soil, and in turn increase side frictional resistance along the shaft and end bearing resistance at the base. Reinforcing steel may be installed in the plastic concrete.	Variable, dependent on the soil conditions.	Allowable load capacities of 50-300 tons.

Table 2.3 Alternative Foundation Systems (continued)

Type of Foundation	Brief Description	Sizes	Load Capacities
Drilled Soil Displacement Piles	Drilled soil displacement piles are constructed by screwing a specially designed auger into the ground to the specified depth without removing spoils. The auger pushes aside and compresses the soil mass to the periphery of the pile. Grout or concrete is pumped through the shaft as the auger is retracted. Reinforcing steel may be added in the fluid grout or concrete.	Typical diameters range from 12-24 inches, and have been constructed up to 32 inches.	Unknown
Tubex Grout Injection Pile	Tubex Grout Injection Pile consists of a steel pipe casing attached to a patented drill tip. The pile is installed using a drill table that pushes the pile into the ground under constant load combined with torque. Upon reaching the bearing stratum, grout is injected under high pressure through the tip via an injection pipe into the surrounding soil. The soil-cement mixture thus formed serves as a protective cover to minimize corrosion potential. After the pile is installed, a reinforcing cage or dowels are placed, and the pile is filled with concrete.	Typical diameters range from12-20 inches.	Load capacities of up to 430 kips have been measured.

Minipiles can be designed to resist compressive, tensile, or lateral loads or combinations of all three. Dependent on the technologies used as well as the subsurface conditions, design capacities of up to 200 tons (compression) can be attained with minipiles.

Based on a review of several case studies that have utilized minipiles, it is clear that minipiles are a viable option for upgrading off-system bridges using existing or supplemental foundation support elements. What makes the minipile option most attractive is the possibility of upgrading the load carrying capacity of existing foundations in areas where headroom is limited or access is restricted.

2.5.2 Screw Piles

Screw piles are circular hollow sections of steel (the shaft) with one or more tapered steel plates (helixes) strategically welded to the shaft, which in turn is wound into the ground using rotary hydraulics for the purpose of compression piles or tension anchors. Screw piles are screwed into the ground much like giant self-tapping screws through the use of rotary hydraulics attached to earthmoving equipment such as mini-excavators, Bobcats, Proline crane borers, or large excavators. The selection of the appropriate type and size of equipment is based on the capacity and size of the screw pile required. Figure 2.5 presents various photographs which show one type of screw pile used in construction, the splicing process, and typical equipment used for screw pile installation.

Screw piles have many advantages, including their speed and ease of installation with a minimum amount of labor, equipment, and materials. Screw piling can be installed with relatively small-sized equipment, which would lend itself well to low headroom and limited access situations typically associated with bridge upgrade projects. The installations are vibration free, require no concrete or reinforcement, and can be installed in a variety of soil and groundwater conditions. Because this system produces no spoils during installation, involves minimal noise during construction, and requires no other materials such as grout, it is an attractive option in urban as well as environmentally sensitive areas.

Screw piling is available to resist loads of up to 200 tons in compression and 100 tons in tension. During and at the completion of the screw pile installation, the installer can monitor the installing torque to ensure that a sufficient load capacity is achieved. Research and development have established an empirical relationship between the installation torque and the screw pile's capacity.

2.5.3 Pressure Injected Footings

Pressure injected footings (PIF) are constructed using cast-in-place concrete that is rammed into the soil using a drop hammer. This process forms a bulb of concrete in the soil at the base of the footing, which increases the end-bearing area and compacts the surrounding soil. This process continues until a specified number of hammer blows is required to drive out a certain volume of concrete.

After the base of the footing is formed, the shaft is constructed which extends the PIF base to the ground surface. Two types of shafts are commonly used: a compacted shaft and a cased shaft. A compacted shaft is constructed when the drive tube is raised in increments,

(a)

(b)

(c)

(d)

(a) Screw pile with rock cutting tip
(b) Splicing screw piles
(c) Installation of screw pile using excavator with rotary drive attachment
(d) Installation of screw pile with rock cutting tip

Figure 2.5 Screw Piles (Source: Instant Foundations; www.instant.com.au)

while simultaneously driving in additional charges of concrete. This technique compacts the surrounding soil, thus increasing the side frictional resistance, and increases the end-bearing resistance by providing a stronger soil over the base. In the construction of a cased shaft, a corrugated steel shell is inserted into the drive tube, followed by the placement and compaction of a zero-slump concrete plug. After the drive tube is withdrawn, the shell is filled with conventional concrete. The cased shaft method is typically used where very soft soils are encountered, because these soils do not provide the lateral support required for the compacted shaft method. Figure 2.6 presents a schematic representation of the pressure injected footing construction process. Figure 2.7 shows a photograph of a cased shaft PIF that has been extracted from the ground.

Advantages of pressure injected footings include:

- The construction process compacts the soil, thus increasing its strength and load bearing capacity. This benefit is most pronounced in relatively clean sandy and gravelly soils (less than 15% passing the No. 200 sieve).
- When compacted shafts are used, the construction process produces a rough interface between the shaft and the soil, which improves the side frictional resistance of the shaft.
- It is possible to build PIFs with large bases, thus gaining additional end-bearing areas in soils such as loose sands, where belled drilled shafts would be impossible to build.

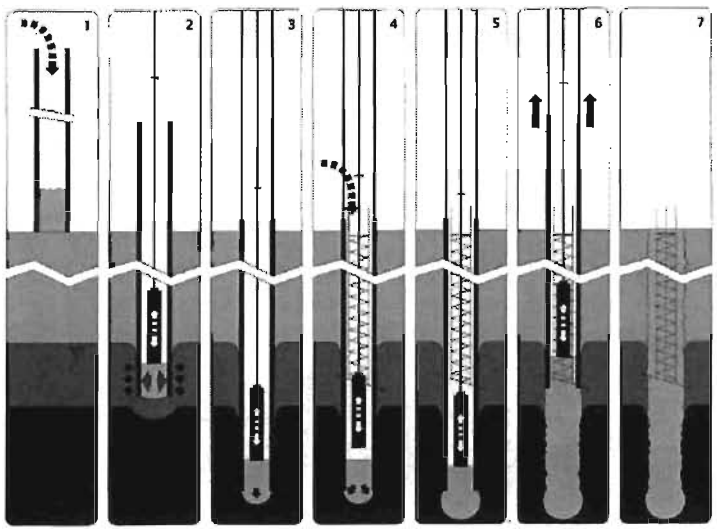

1. Construction of the PIF plug with gravel.
2. Bottom driving with an internal hammer. This operation causes compression of the soil by lateral displacement.
3. Expulsion of the plug and starting to form the PIF base.
4. Formation of the PIF base and anchoring of the reinforcement.
5. Driving completed.
6. Concreting of the shaft. Successive charges of zero slump concrete are rammed into the soil, simultaneously withdrawing the tube.
7. The PIF pile. A driven cast-in-situ pile with a cast-in-situ pressure injected base.

Figure 2.6 Construction of a Pressure Injected Footing (PIF)

Figure 2.7 Extracted Cased Shaft PIF with a 24" Base Diameter
(Source: "Foundation Design Principles and Practice", Donald P. Coduto, Prentice Hall, Inc., Copyright 2001, Figure 11.49, page 428)

The disadvantages of PIF foundations include:

- The construction process generates large vibrations.
- The construction equipment is bulky and cumbersome.
- Compacted shafts cannot include large amounts of reinforcing steel.
- Although each PIF has a higher load capacity than a pile or drilled shaft of comparable dimensions, it is typically more expensive to build.
- PIFs are generally economical only when the length is less than about 30 feet for compacted shafts and about 70 feet for cased shafts.

PIF foundations may be installed individually or in a group of two or more connected by a pile cap. Either type of shaft can be reinforced to resist uplift or lateral loads. Dependent upon soil conditions, base diameter, and shaft diameter, the allowable downward capacities for pressure injected footings can range from 50 tons to 300 tons.

2.5.4 Drilled Soil Displacement Piles

Drilled soil displacement piles are cast-in-place piles constructed by screwing a specially designed auger into the ground to the specified depth without removing spoils as the auger penetrates. As the auger is advanced, it displaces the soil laterally, thus densifying and improving it. When the required depth is reached, a highly workable grout or concrete is pumped through the center of the hollow auger, displacing the sealing flap or point at the base of the auger shaft. The grout or concrete then flows under pressure out of the auger base as it is retracted. The flighting of the auger ensures that the soil above the auger remains compacted, which results in a pile shaft that is effectively bonded to the surrounding soil. Quality and design requirements are ensured by properly controlling the rate of auger

extraction and the grout or concrete flow rate. When the concreting phase is complete, an appropriate reinforcing cage or center bar is lowered into the fluid grout or concrete. Figure 2.8 presents a schematic representation of this construction process. Figure 2.9 shows a drawing of the specialized hollow stem auger used in this process.

The advantages of the drilled soil displacement pile system include:

- Drilling spoils, as well as the costs and time associated with spoil removal, are eliminated.
- Environmental risks are reduced
- Vibrations and noise are eliminated or reduced when compared to a pile driving operation.

The disadvantages of this system include:

- The equipment and expertise may not be locally available in a particular project area, which may increase the costs and the time associated with mobilization and demobilization.
- The specialized equipment and technology may be more costly than conventional TxDOT foundation support methods. This issue would depend on the location and size of the project, as well as on the site conditions.

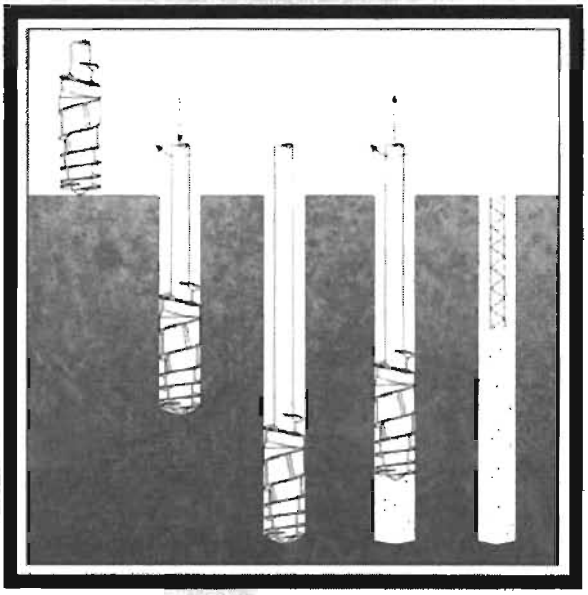

Step 1: Screw the auger into the ground to the specified depth (no spoils are removed)
Step 2: Pump grout or concrete through the auger as it is retracted and rotated
Step 3: Insert a reinforcing steel cage or center bar into the fluid grout or concrete

Figure 2.8 Construction of a Drilled Soil Displacement Pile
(Source: L.G. Barcus & Sons, Omega Drilled Soil Displacement C.I.P. Pile Brochure)

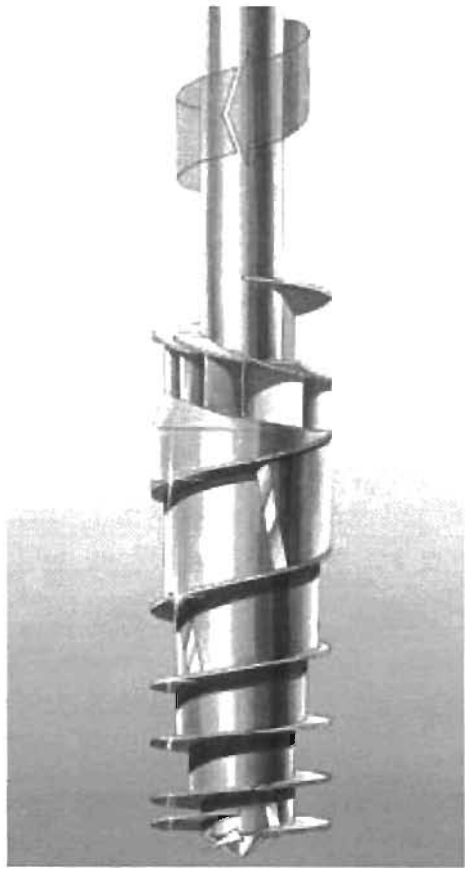

Figure 2.9 Drilled Soil Displacement Cast-In-Place Pile Auger
(Source: L.G. Barcus & Sons, Omega Drilled Soil Displacement C.I.P. Pile Brochure)

2.5.5 Tubex Grout Injection Piles

A Tubex grout injection pile consists of a steel pipe casing attached to a patented drill tip. The casing is used as a lining for the concrete, which is placed after the pile has been installed. The casing is usually used as a structural element of the pile. The drill tip serves as an installation aid and provides the means through which grout is injected to produce a soil-cement mixture around the pile.

The Tubex pile is installed by first placing a length of pipe into the drill table as appropriate for the project headroom conditions. The drill tip is then welded onto the bottom of the pipe casing, providing a watertight connection. The drill table forces the pile into the ground by means of a constant vertical load combined with torque. The drilling and splicing operation is continued until the required depth is reached. Upon reaching the bearing stratum, grout is injected under high pressure into the surrounding soil through the tip via an injection pipe. The rotation of the pipe in conjunction with the design of the tip produces a soil-cement mixture around the casing. After the pile is installed, a reinforcing cage or a set of dowels is placed, and the pile is filled with concrete.

The advantages of the Tubex system include the following:

- The installation is vibration free, so there is no danger to existing structures or sensitive equipment inside those buildings.
- The full-length casing may be inspected prior to concreting.
- Very low noise levels are generated.
- Piles may be installed in or near existing structures where low headroom or limited access conditions exist.
- No spoils are produced. The soil is displaced laterally and compacted. Therefore, there is no danger of transporting potential contaminants to the ground surface.
- The soil-cement mixture surrounding the pipe casing serves to insulate and protect the steel pipe in corrosive soil environments.

The disadvantages of the system include:

- The equipment is specialized and thus the cost of mobilization and demobilization may be high.
- Auger piles may not be a viable option for smaller off-system bridge projects, particularly those located in remote areas as they may not be readily available in all areas of the state.

Standard dimensions of the Tubex pile system range from 8 5/8 to 20-inch pipe casing diameters with a corresponding range of drill tip diameters from 12 to 26 3/8 inches. The piles may be designed to resist axial loads in compression and tension as well as lateral loads. Compressive load capacities of up to 430 kips have been measured with the Tubex pile system.

CHAPTER 3

SUPERSTRUCTURE SYSTEMS

The previous chapter focuses on substructure design-related issues and potential solutions. This chapter is focused on superstructure design issues, with initial sections concentrating on discussing current TxDOT design approaches. TxDOT currently has in its inventory numerous standard superstructure systems and components commonly used, as listed in the TxDOT Bridge Design Manual (TxDOT, 2001). These solutions include concrete slab spans, concrete pan form slab and girder systems, prestressed concrete deck panels, prestressed concrete box beams, prestressed concrete double tee beams, prestressed concrete I-beams, prestressed concrete U-beams, and rolled steel I-beams.

In addition to these standardized bridge types, several types of currently proprietary, but commercially available, bridge replacement systems are discussed at the conclusion of this chapter. The replacement designs proposed by TTU, which are described in Chapter 6 of this report, relate closely to some of the standard TxDOT systems and components, but incorporate strategic innovations targeted specifically for off-system bridges.

3.1 SLAB SPANS

Simple- and continuous-span cast-in-place concrete flat slabs, commonly called slab spans, are effective for low headroom crossings. TxDOT has used these types of structures for many years. They provide small superstructure depths and aesthetic structures for short span crossings. In addition, they provide ease of design and detailing with continuous slabs having the added benefit of no deck joints. However, simple and continuous slab span superstructures are not typically economical due to the relatively high cost of the abutments associated with their shorter span lengths. In addition, widening of simple slab spans is discouraged and is even prohibited for spans originally designed for only HS10 designs.

The interior spans of continuous slab spans have been as long as 40 feet and 60 feet for constant and variable depths, respectively. However, ride quality problems associated with long-term deflections have arisen with the longer span lengths and have consequently reduced their use. Currently, variable-depth continuous slab spans are not recommended, while constant depth continuous slab spans are limited to less than 200 feet in total bridge length, due to both thermal effects and end restraint conditions. The TxDOT Bridge Design Manual (TxDOT, 2001) indicates that practical limits for simple slab spans with a 1.5-foot slab thickness are 30 feet with a 0-degree skew and 40 feet with a 45-degree skew. For continuous slab spans, the limit is 35 feet with a maximum 30-degree skew. Even though these two cast-in-place slab span types are standard superstructures, their limited practical span lengths and their extended required times of construction generally rule them out as potential solutions for the two prototype examples of this study.

3.2 CONCRETE PAN FORM SLAB AND GIRDER SYSTEMS

Cast-in-place concrete pan form slab and girder bridges provide an economical solution for shorter spans. A typical bridge cross-section is shown in Figure 3.1. Modular steel inverted U-shaped forms are used to form the bridge cross-section and, as they are supported only at the bent caps, they require no intermediate supports. Once the concrete gains sufficient strength, the pan forms are removed and reused, adding to the economy of the method. Standard details for five roadway widths are currently available from TxDOT. Practical simple span limits for concrete pan form slab and girder bridges are in the 34-foot range for 2.0-foot depths and in the 40-foot range for 2.75-foot depths, both for skews from 0 to 45 degrees. This type of bridge has a history of maintenance problems associated with joint growth caused by the build-up of dirt in the joints between the simple spans. In spite of this common maintenance problem, this superstructure is still used from time to time today. However, its limited span lengths and the extended required construction time associated with cast-in-place construction make this type of superstructure undesirable for the cases of interest in this study.

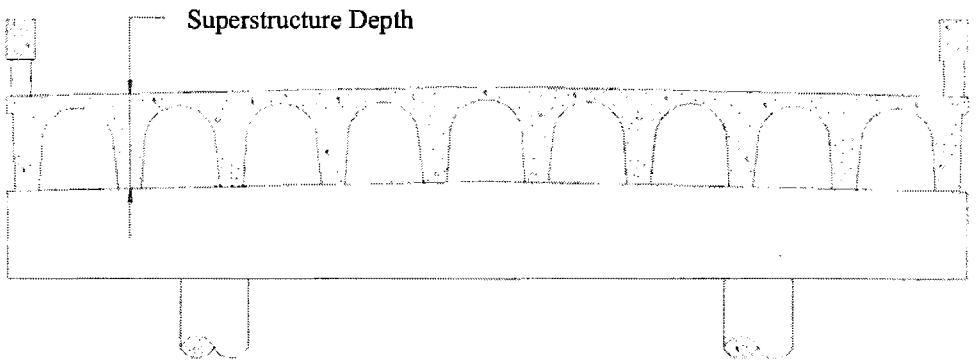

Figure 3.1 Concrete Pan Form Slab and Girder System (TxDOT, 2001)

3.3 PRESTRESSED CONCRETE DECK PANELS

Prestressed concrete deck panels (PCPs) are commonly used in deck slabs on stringers in Texas bridges. They are four inches thick and are used to provide the bottom half of the deck in conjunction with the top half of the cast-in-place (CIP) concrete deck, which is commonly now specified as having an 8-inch total thickness. A typical configuration for a PCP is shown in Figure 3.2. The PCP, which was first used in Texas in the early 1960s, has grown in popularity to become the "preferred" method for use with prestressed I-beams and U-beams and is occasionally used with steel girders (TxDOT, 2001). PCPs contribute to an economical structure, function as a stay-in-place form for the top half of the CIP concrete deck, and provide a quick and sturdy surface upon which workers can install the remainder of the bridge deck. Even though they are commonly used, their use is currently restricted with regard to curved steel girders and certain regions of bridge widening and staged constructions (TxDOT, 2001).

The speed of construction using this method is exceptional. Considering the speed of placing precast concrete or steel I-beams along with the speed of placing these panels highlights the relative slowness of the final cast-in-place portion of the deck slab. It is apparent that a reduction in the time required for the cast-in-place deck has the highest potential for reducing the time required for constructing the superstructure. The proposed TTU approach is based on this recognition.

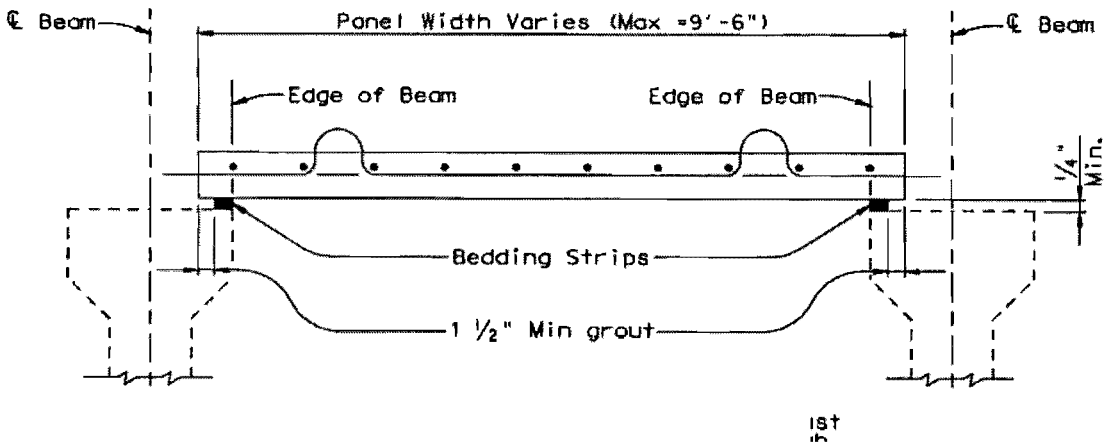

Figure 3.2 Prestressed Concrete Deck Panels (TxDOT, 2001)

3.4 PRESTRESSED CONCRETE BOX BEAMS

Prestressed concrete box beams provide practical solutions where minimum superstructure depth or speed of construction controls the design. The prestressed concrete box beams first appeared in Texas in the late 1960s. Typical TxDOT details have been developed for these beams with depths of 20, 28, 34, and 40 inches and widths of approximately 4 to 5 feet for each of the typical depths. A typical bridge cross-section using prestressed concrete box beams is shown in Figure 3.3. The box beams are placed side-by-side to form the bridge superstructure and are interconnected via cast-in-place shear keys. The current recommended design is the use of the boxes with a 5-inch-thick reinforced concrete slab cast monolithically with the shear keys. Asphalt overlays have been used with prestressed concrete box beams, though their use currently is discouraged.

Prestressed concrete box beams tend to minimize bridge superstructure depths and speed up construction. They also have an additional advantage when used with staged construction. They are not typically the most economical solution due the higher cost associated with box beam fabrication. Difficulties and higher costs are commonly encountered with the forming of the box's void and with maintaining acceptable fabrication tolerances. In addition, box beams are typically suited for curved, flared, or skewed bridges. Practical limitations require the use of a 20-inch box beam for the 50-foot clear span of interest in this project, resulting in a 2.08-foot superstructure depth, and the use of a 34-inch box beam for the 90-foot clear span design, resulting in a 3.25-foot superstructure depth. In

addition, long construction times associated with cast-in-place shear keys and deck slabs will have to be addressed if the prestressed box beam is selected as a viable alternative.

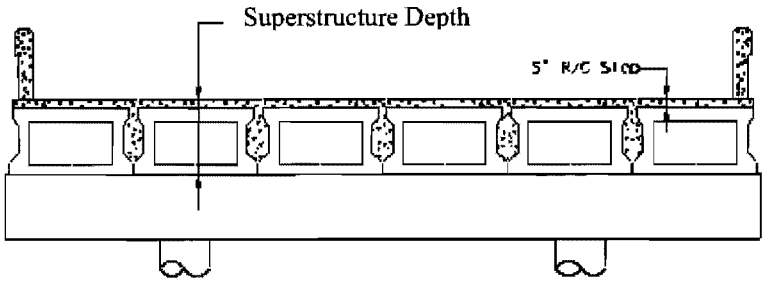

Figure 3.3 Prestressed Concrete Box Beam (TxDOT, 2001)

3.5 PRESTRESSED CONCRETE DOUBLE TEE BEAMS

Prestressed concrete double tee beams yield economical superstructures for spans in the 30- to 40-foot range and require very little formwork in the field. Their use in Texas began in the mid 1980s, and they can be used with either a 4.5-inch reinforced concrete overlay or a 2-inch asphalt concrete overlay, with the reinforced concrete overlay being the most common and recommended. A typical prestressed concrete double tee beam bridge cross-section is shown in Figure 3.4. The double tee beams are produced with nominal depths of 21 or 22 (T21/T22), 27 or 28 (T27/T28), and 35 or 36 (T35/T36) inches, with the smaller nominal value of each pair used with reinforced concrete overlays and the larger value used with asphalt concrete overlays. The double webs of the double tee beams are spaced at four feet center to center with varying outside flange overhang dimensions, allowing total specified beam widths of 6, 7, or 8 feet. These double tee beams have maximum practical span limits of 50 and 60 feet, respectively, for T27/T28 and T35/T36 double tee beams, which are in the range of the smaller bridge span of interest in this study, and have superstructure depths of 2.75 and 3.42 feet, respectively. However, typical TxDOT prestressed concrete double tee beams are not a practical solution for the larger 90-foot span of interest in this project. Maintenance problems with longitudinal cracking were experienced early with reinforced concrete overlays but were alleviated in the late 1990s by a design change in the shear plate connector spacing. A 2-foot-wide reinforcing mesh over the longitudinal joint should be considered when an asphalt concrete overlay is used. Construction and time issues concerning the cast-in-place reinforced concrete overlay must be addressed as well, should ride quality concerns become a central design issue for a particular off-system bridge project.

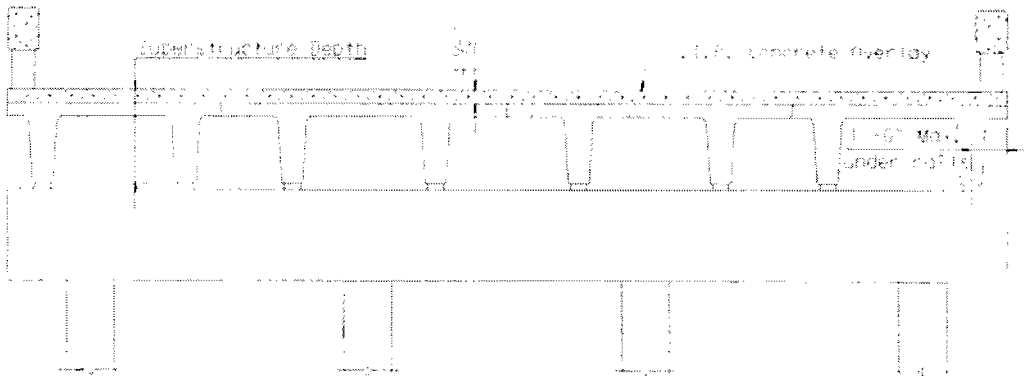

Figure 3.4 Prestressed Concrete Double Tee Beam (TxDOT, 2001)

3.6 PRESTRESSED CONCRETE I-BEAMS

Prestressed concrete I-beams are one of the primary superstructure elements used by TxDOT today. Their first significant use in Texas was in 1956. The popularity of this structural element has grown and today they are used in approximately 45% of TxDOT bridges (TxDOT, 2001). Their widespread popularity throughout Texas is due to their economy, speed of construction, flexibility, and availability. A typical prestressed concrete I-beam bridge cross-section is shown in Figure 3.5. These beams provide economical bridges for spans in the 45- to 145-foot range and are adaptable to most geometric configurations (flared, curved, skewed, etc.).

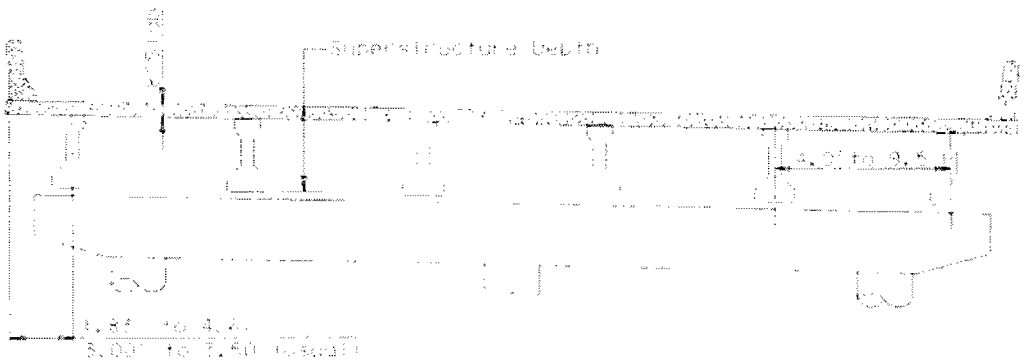

Figure 3.5 Prestressed Concrete I-Beams (TxDOT, 2001)

Four primary I-beam types are used by TxDOT, and they are designated as Types "A," "B," "C," and "IV." These four types have depths that range from 28 inches to 54 inches. Their larger depths constitute one of their disadvantages when a maximum hydraulic structural profile is important. Total superstructure depths range from 3.17 feet to 6.83 feet for Type "A" to Type "IV" beams. Care must be taken when handling I-beams to prevent unwanted cracking or buckling of the beams, generally caused by their own prestressing force prior to application of the deck panels. For the 50-foot span of interest in this project, a

Type "A" I-beam can be used with a practical maximum span length of 60 feet or a Type "B" I-beam can be used with an economical maximum span length of 80 feet. For the 90-foot span of interest in this project, a Type "C" I-beam can be used with a practical maximum span length of 90 feet or a Type "IV" I-beam can be used with an economical maximum span length of 115 feet. These I-beams are commonly used with 4-inch-thick precast deck panels and an additional 4-inch-thick reinforced concrete deck cast-in-place for composite action with the deck panels and the I-beams.

3.7 PRESTRESSED CONCRETE U-BEAMS

Development of prestressed concrete U-beams was initiated by TxDOT in the mid 1980s with their first implementation occurring in Houston in 1993 (TxDOT, 2001). Their development was undertaken to provide an aesthetic and economical alternative to the prestressed concrete I-beams heavily used throughout Texas. Their popularity and use have grown since their initial development. Two U-beam cross-sections were developed by TxDOT: a U40 which has a 40-inch depth and an 89-inch width at the top and a U54 which has a 54-inch depth and a 96-inch width at the top. A typical bridge cross-section using U-beams in conjunction with 4-inch-thick precast deck panels and an additional 4-inch-thick cast-in-place concrete deck slab is shown in Figure 3.6. U-beams generally are not as economical as I-beams but can be used where aesthetic value is important. The U40 has a maximum economical span length of 100 feet and a maximum practical span length of 110 feet, making it a viable alternative for the 90-foot span but not for the 50-foot span of interest in this project. However, the weight of the U-beams will generally limit their use for off-system applications.

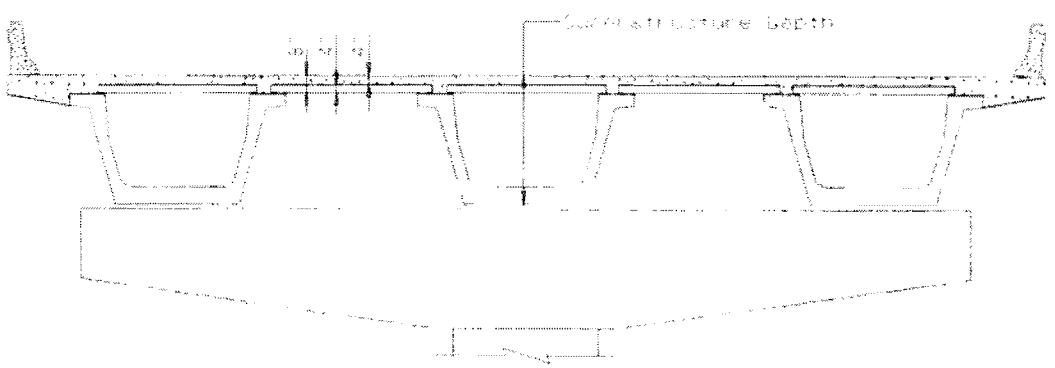

Figure 3.6 Prestressed Concrete U-Beams (TxDOT, 2001)

3.8 ROLLED STEEL I-BEAMS

Rolled steel I-beams have been used by TxDOT to construct bridges since the early 1900s. They are manufactured in a wide range of sizes and depths and can be adapted to various span lengths and beam spacings. They can be used with cast-in-place reinforced concrete decks or in combination with precast concrete deck panels and cast-in-place

concrete, similar to prestressed concrete I-beams. A typical steel I-beam bridge cross-section is shown in Figure 3.7. Steel I-beams were initially used as simple spans but with the onset of welding and the development of simplified welded splice details, continuous steel I-beam spans began to be extensively used by the 1950s (TxDOT, 2001). However, rising steel costs in the 1960s coupled with the onset of prestressed concrete I-beam construction led to a diminished use of steel I-beams in Texas. Steel I-beams provide easy connections, are adaptable to various bridge geometries, including curved bridges, and provide smaller superstructure depths than prestressed concrete beams. However, they typically are more expensive and have more maintenance problems than concrete I-beams due to corrosion. The span lengths of interest in this project would require a W21 I-beam and a W33 I-beam for the 50- and 90-foot spans, respectively. These two I-beams would yield superstructure depths of 2.58 and 3.58 feet, respectively.

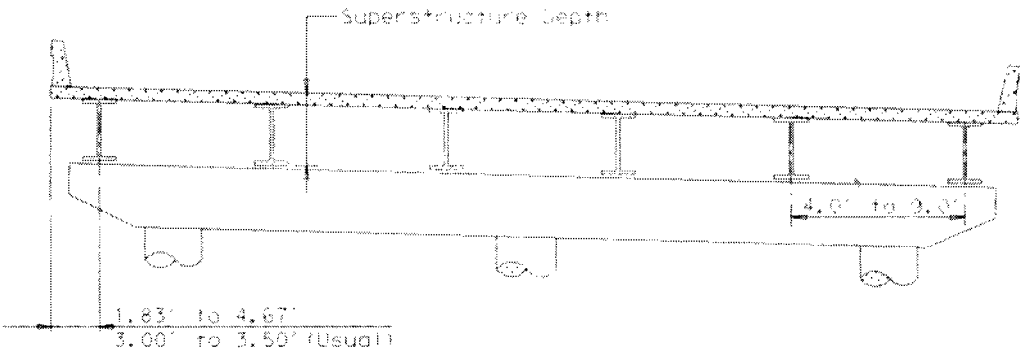

Figure 3.7 Rolled Steel I-Beams (TxDOT, 2001)

3.9 PROPRIETARY / COMMERCIAL SYSTEMS

3.9.1 Introduction

In addition to the standardized bridge components described in the previous section, there are several commercially available bridge systems that could be applicable to this project. While not part of standard TxDOT practice, each of these systems can potentially solve some specific off-system bridge problems. Owners, contractors, and designers can select these prefabricated systems to lower costs, minimize road closure times, take advantage of the better quality control that precast or prefabricated construction offers, and utilize components that can be installed in most weather conditions. Several specific systems have been investigated and are described in detail in this section. Again, as mentioned earlier in this chapter, two additional innovative superstructure solutions are presented in Chapter 6 of this report.

3.9.2 Travel/Site Visits

Researchers completed several site visits for this project. Stan Grossman, the inventor of the Inverset® system (discussed in the following subsection) was visited at his office location in Oklahoma City, Oklahoma (June 27, 2003). While there, a site visit to a "mainline" bridge replacement was made. In addition, a brief site visit was made at the Fort Miller casting yard in Greenwich, New York (July 3, 2003).

Other travel to gain information included trips to the Houston Bridge Division of TxDOT (March 7, 2002), the Dallas TxDOT Workshop on Precast Bridge Components and the Lake Ray Hubbard demonstration (March 28-29, 2002); the Madison, Wisconsin, Railroad-Highway Crossings Course (March 2-5, 2003); the Temple, Texas, Lake Belton Bridge Precast Concrete Bent Cap Demonstration Workshop (July 31, 2003); the Nashville, Tennessee, Concrete Bridge Conference (October 6-9, 2003); and the St. Louis, Missouri, National Prefabricated Bridge Elements & Systems Conference (February 18-19, 2003). In addition, consultants were met in Lubbock and at TxDOT meetings in Austin, and contacts were maintained with them by phone, surface mail, and e-mail.

This travel, along with the literature search performed, assisted in the development of the solutions presented in Chapters 5 and 6.

3.9.3 Inverset® Bridge System

The Inverset® Bridge System combines the advantages of steel, concrete, and a unique manufacturing process. Fort Miller Co., Greenwhich, New York, until January 2002, held the license to manufacture and distribute the Inverset® System, which was developed by Stan Grossman of Grossman and Keith Engineering Co., Norman, Oklahoma. Figure 3.8 shows the unique Inverset® precasting procedure in which the concrete deck of each unit is precast upside down with the forms suspended from the steel beams and deflection control provided from the ground. This precasting procedure puts the theoretically denser concrete at the bottom during casting to become the surface of the bridge deck, unlike site-cast decks where the surface concrete is likely to be the most porous. This innovative procedure has the potential to help eliminate deck cracking.

- In addition, it should provide a more durable deck, i.e., one resistant to abrasion by traffic, freeze-thaw cycles, and corrosive solutions.
- The composite design also creates a compact section that allows the bridge deck and the beams to work together, increasing the moment of inertia.
- The procedure also 1) provides composite properties to resist all applied loads and 2) prestresses the steel beams.
- As a result, the beams can be smaller, shallower and therefore lighter, producing structural steel savings, increasing the hydraulic profile, and reducing the dead load.
- The first Inverset® patent expired in January 2002.

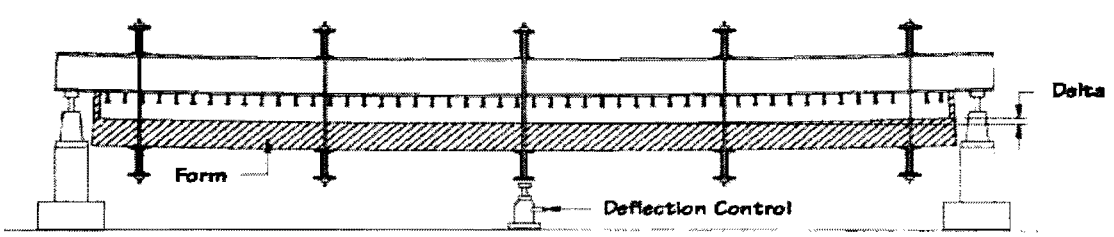

Figure 3.8 Inverset® Precasting System (NYSDOT, 2001)

The precast Inverset® system allows for consistently high strength and good quality control during the manufacturing process. The precast units are custom manufactured for specific widths and spans. Since a majority of the bridge is precast, on-site weather delays are minimal. Erection of the precast units can be completed in a day for most short span bridges, using a crane and a small crew (American City & County, 1992). A current maximum span of 90 feet would fit the longer span of interest in this study. For this span with a 10-foot-wide section, the Inverset® unit would weigh about 109k. A 90-feet long, Type IV girder would weigh approximately 74k. A large crane would be required to install both elements, with a somewhat smaller crane required for the precast concrete girder. Although this is not typically a problem in urban environments, it could be a significant concern for off-system applications. One of the remedies to compensate for the large weight has been to construct sections close to the site and then slide or lift the bridge into position. Such a strategy could work for certain off-system applications, but not for all.

Note that when the Inverset® section is flipped over for installation, the deck concrete has compression induced naturally as the beam section is cast with a "reverse camber." As an alternative to the "concrete-on-bottom-cast," Inverset® has a much easier, though theoretically less durable, "concrete-on-top-cast" solution.[3] Although the latter does not provide the desirable upside down cast concrete, potential mistakes in the precasting yard are less likely to occur. Another primary advantage of the Inverset® system is that once the section is in place, the riding surface is ready for traffic (i.e., no deck pour is necessary).

As stated, the primary disadvantage of the Inverset® system, with respect to the off-system bridge problem, is the need for heavy lifting equipment. Here, the 109k Inverset® module is compared to a 47.5k Type C precast concrete girder. (See Section 6.2.6) Thus for this general study, the Inverset® system is felt to be too massive for most rural installations. However, it is important to note that each site is somewhat unique. Some rural installations actually allow the use of more massive equipment than do urban areas, due to lack of nearby obstacles. As this study is general in scope, the availability of specialized equipment such as very large cranes is not assumed. However, at any given site, should heavier equipment be allowed the Inverset® system should be considered.

Mr. Grossman continues to invent new solutions for these types of bridge structures and has gained fairly widespread implementation. As the off-system bridge problem becomes more clearly defined, the Inverset® method and its future derivations should be evaluated for applicability as the theory behind the method shows much promise.

3.9.4 U.S. Bridge Systems

U.S. Bridge offers prefabricated "through-truss" bridges for longer spans and "beam" bridges for shorter spans. The truss bridge can have a clear span up to 150 feet, while the beam bridge can accommodate clear spans of up to 60 feet (U.S. Bridge, 2002). Figure 3.9 shows examples of both bridge types.

---

[3] Although the concrete-on-top-cast is potentially less durable than the original Inverset® method, it should still be significantly more durable than current construction due to the use of precast concrete and the fact that by using of one or two temporary supports while the concrete hardens, produces deck precompression after removal of the support(s).

(a) (b)

Figure 3.9 U.S. Bridge Truss and Beam Bridges (U.S. Bridge, 2002)

U.S. Bridge claims to have an economical design solution because of the high strength-to-weight ratio of steel and long clear spans that eliminate the need for piers, which are expensive and can obstruct waterways (U.S. Bridge, 2002). These bridges can be designed for a) skewed alignments, b) roadway widths up to three lanes, and c) AASHTO HS-20, HS-25, and even heavier loads if required.

U.S. Bridge bridges have several flooring options, including wood, concrete, and U.S. Bridge's own corrugated steel floor with an asphalt wearing surface. The steel corrugated bridge flooring units are designed to be lapped over and secured to each other and to the bridge stringers at every corrugation. This arrangement allows the flooring to become an integral component of the structure, thus creating a stronger bridge.

Longer bridges can be spliced for shipment and reassembled at the site. No field welding is required as all connections are bolted. The bolting operation can be completed in approximately two hours.

Although both U.S. Bridge designs are likely to have many good applications in Texas, the "through-truss" design has a major drawback for off-system bridges due to its high structural trusses. Oversized machinery, such as farm equipment, may have difficulty crossing this through-truss type of bridge because of the height of the trusses along the longitudinal edges of the bridge. In many off-system areas, extremely wide loads are required. In case such a vehicle, e.g., a farm tractor with implements attached, could not raise the wide portion of the load to clear a typical barrier, it would be unable to pass through the truss bridge. For spans less than 60 feet, the beam bridge option remains viable.

3.9.5 Steadfast Bridge System

Similar to the U.S. Bridge through-truss bridge, prefabricated through-truss bridges by Steadfast Highway Truss Bridges can clear-span 20 to 150 feet with road widths from 12 to 40 feet (Steadfast, 2002). Figure 3.10 shows two examples of steadfast bridges.

(a)

(b)

Figure 3.10 Steadfast Highway Bridges (Steadfast, 2002)

Similar to U.S. Bridge, Steadfast can meet skewed alignments, AASHTO HS-20 and HS-25 loads, and even heavier loads if required. Also, Steadfast allows numerous flooring options, as the truss bridges can be floored with concrete (cast-in-place or precast), asphalt with a steel deck base, a fiber-reinforced polymer, or wood.

Similar to U.S. Bridge, Steadfast bridges over 70 feet in length may be spliced for shipment. They then would require assembly prior to installation. No field welding is required as all connections are bolted and can be completed in approximately two hours. Steadfast claims that most bridges can be erected in less than one day.

Again, similar to the U.S. Bridge design, the Steadfast Bridge offers an aesthetically pleasing design that can be assembled in a relatively short amount of time. In areas where local contractors are familiar with steel construction, and where extremely wide load permits are not necessary, these types of bridges could be the design of choice. However, similar to the U.S. Bridge truss bridge, oversized machinery, such as farm equipment, may have difficulty crossing this type of bridge due to the trusses along longitudinal edges of the bridge.

3.9.6 Con/Span Bridge Systems

Con/Span has become widely recognized and utilized for bridge construction around the country. Con/Span uses a system of precast arches, precast wing-walls, and precast headwalls to construct an economical and aesthetically pleasing bridge. Figure 3.11 shows the arches of a bridge being erected and a completed bridge. The precast arches are first placed on the foundations. Next the headwalls and wing-walls are installed. Field installation of the prefabricated components, which are delivered to the site and set in place by a crane, can be completed in a matter of hours (Con/Span, 2002). After the installation of the prefabricated components, fill is placed within the components, and the ride surface is constructed.

(a) (b)

Figure 3.11 Con/Span Bridge System (Con/Span, 2002)

Con/Span offers a clear span series ranging from 12 to 48 feet with variable heights and lengths, where the length is being determined by the number of arches placed end-to-end (Con/Span, 2002). The precast components can be adjusted to meet curved alignments and can be set side-by-side to satisfy the width requirements of the particular bridge.

Although Con/Span does not meet the design criteria of the two prototype TxDOT off-system bridges, it remains a potentially viable method of construction. The maximum span length is slightly less than the 50 feet required, but the concept certainly works for the smaller TxDOT span option. It is unlikely that the current Con/Span design can be used for the 90-foot clear span. However, if the arch is "split" and spliced in the middle, it could conceivably be made to work for the longer span. In both cases, the weight of the pieces may prove to be too great for the system to work in all off-system conditions. Nevertheless, the method holds promise as many off-system bridges have span lengths less than 48 feet. Although the speed of construction may not compete with that of I-beams with full-width full-depth deck panels, as presented in Chapter 6, it is faster than concrete cast-in-place deck systems. Also, if the new bridge can be built to the side of the existing bridge as discussed in Chapter 5, the Con/Span Bridge could be the most economical option.

3.9.7 Bailey Bridge System

Bailey bridges have clear spans ranging from 50 to 190 feet (Bailey Bridges Inc., 2002). Multiple span bridges of any length are possible with the addition of intermediate piers. Bailey bridges are commonly used as temporary bridges while construction or rehabilitation of a permanent bridge is taking place, but they also can be used as permanent bridges, which is the application of interest in this study.

Bailey bridges are assembled on-site from a pre-engineered system of components. Most bridges are assembled and installed in a matter of days by a small crew. All connections are pinned, bolted or clamped so only common tools are necessary. No welding is required. Disassembly is similarly easy, and components can be stored in minimal space until reused. The Bailey bridge is also versatile; a 40-foot bridge uses essentially the same parts as a 160-foot bridge.

Bailey bridges are usually installed by a cantilever launching method. This method uses the assembled bridge and a launching nose that is rolled out across the gap without

formwork or heavy lifting equipment (Bailey Bridges Inc., 2002). Figure 3.12 shows the cantilever launch method, which allows the bridge to be launched over rivers or deep canyons. However, Bailey bridges may also be set into place by crane.

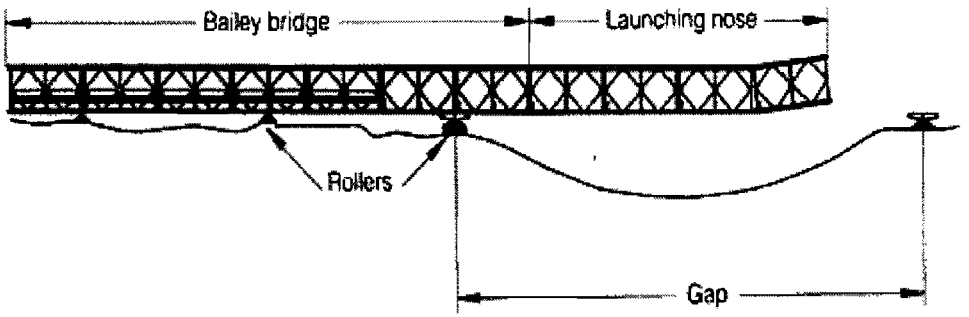

Figure 3.12 Cantilever Launch Concept (Bailey Bridges Inc., 2002).

3.9.8 Other Systems

It is important to mention that the state-of-the-art prefabricated systems previously discussed are not the only systems that exist. There are many other state-of-the-art solutions that could be applicable to the numerous off-system bridges in Texas. Some of these systems include Mabey Bridge, Acrow Bridge, Nudeck, and Bebo Bridge Systems. Also, each state-of-the-art solution has advantages and disadvantages, so it is important to consider each individual off-system bridge project and decide which, if any, of these solutions can provide a rapid, cost effective, and functional replacement.

3.10 SUMMARY

A brief overview of available systems has been presented. A summary of the overview is shown in Table 3.1. As new systems become available routinely, this overview cannot be considered complete. A proper systems evaluation requires a more accurate definition of an "off-system bridge replacement." Once several particular sites are identified, visits to the actual construction sites are needed. In addition, visits to precast and/or fabrication plants and interviews with owners, contractors, inventors, and precast or fabrication plant managers are needed. Such meetings with all relevant parties have great potential for solving many of the identified problems. As discussed in Section 3.9.2, a significant amount of travel and site visits occurred over the course of this research project. However, with so many undefined variables, it was difficult to develop a definitive "solution" to the off-system problem. Ultimately a full-scale implementation of particularly innovative solutions is needed.

Table 3.1 Bridge Matrix

Bridge Systems	**50-foot clear span**	**90-foot clear span**	**Comments**
Slab Spans	Not applicable	Not applicable	Due to the short practical span lengths and longer times of construction caused by the required cast-in-place concrete method, this system is ruled out for both prototype cases.
Concrete Pan Form Slab and Girder	Not applicable	Not applicable	Due to the short practical span lengths and longer times of construction caused by the required cast-in-place concrete method, this system is ruled out for both prototype cases.
Prestressed Concrete Deck Panel (partial-depth)	Not applicable	Not applicable	Although very economical, this system is ruled out for both prototype cases due to the required cast-in-place pour for the top half of the slab.
Prestressed Concrete Box Beams	Yes (20-inch box beam)	Yes (34-inch box beam)	Longer construction times associated with cast-in-place shear keys and deck slabs will have to be addressed for this to be considered a viable system.
Prestressed Concrete Double Tee Beams	Yes (T27/T28 or T35/T36)	Not applicable	Construction and time issues for the cast-in-place reinforced concrete overlay and diaphragms will have to be addressed for this to be considered a viable system.
Prestressed Concrete I-beams	Yes Type A or B	Yes Type C or IV	Prestressed Concrete I-beams offer an economical bridge structure and are being proposed with full-depth full-width precast concrete panels.
Prestressed Concrete U-beams	Not applicable	Yes (U40)	It is anticipated that the weight of the U-beams will be excessive for most off-system bridges due to the remote locations and the difficult access for heavy machinery.

Table 3.1 Bridge Matrix (continued)

Bridge Systems	**50-foot clear span**	**90-foot clear span**	**Comments**
Rolled Steel I-beams	Yes (W21)	Yes (W33)	Steel girders may provide a viable solution and should be investigated in future years for use with full-depth full-width precast concrete deck panels.
Inverset®	Yes	Yes	This is a prefabricated system that utilizes steel I-beams and a concrete slab. High potential in Particular site locations. No CIP pour required.
U.S. Bridge	Yes	Yes (clear span up to 150-feet)	This system can be used for both prototype cases. However, the side trusses may make it difficult for oversized machinery, such as farm equipment, to cross the bridge.
Steadfast Bridge	Yes	Yes (clear span up to 150-feet)	This system can be used for both prototype cases. However, the side trusses may make it difficult for oversized machinery, such as farm equipment, to cross the bridge.
Con/Span	Yes (clear span up to 48-feet)	Not applicable	Although the maximum clear span for this system is 48-feet, it is believed modifications can be made to increase the clear span to 50-feet or more.
Bailey Bridge	Yes	Yes (clear span up to 190-feet)	This system was investigated for use as a temporary bridge, however, it also can be used as a permanent bridge. The side trusses may make it difficult for oversized machinery, such as farm equipment, to cross the bridge.

CHAPTER 4

CONSTRUCTION STRATEGIES AND CONTRACTUAL ISSUES

This chapter provides a brief overview of general construction strategies and contractual issues involved in the construction of off-system bridges. Considering the discussion provided in Chapters 1 through 3, along with the issues presented in this chapter, proposed substructure and superstructure solutions to the two TxDOT off-system prototype cases are given respectively in Chapters 5 and 6.

4.1 GENERAL CONSTRUCTION STRATEGIES

Several general strategies are used commonly to minimize traffic interruptions during bridge replacement projects. These strategies include:

(a) construction of the new bridge adjacent to the existing one with an offset in alignment;
(b) construction of a temporary bridge adjacent to the existing one for the traffic to use during bridge reconstruction;
(c) use of special low-headroom equipment so that construction of the new bridge can proceed while the existing bridge remains in service; and
(d) scheduling construction for periods of low traffic volume such as nights and weekends and using rapid construction methods.

The first two options do not require innovative substructure or superstructure designs and therefore are not evaluated in this project. They are discussed briefly, however, as part of the overall contractual setting of the project. Similarly, the third option applies primarily to multi-span bridges where pier foundation work can be performed without closing the bridge. The low-headroom equipment required with this option also can be utilized for the abutments of the single-span prototype cases of interest to this project. Finally, the fourth strategic option relates to both the substructure and superstructure work of any bridge replacement project.

4.1.1 Construction of the New Bridge with an Offset

By constructing the new bridge next to the existing bridge, traffic interruptions due to bridge reconstruction are completely avoided. Traffic continues to use the old bridge while the new one is being erected. Once construction of the new bridge and its approach is complete, traffic is redirected to the new bridge. The old bridge then is demolished. Though perhaps the least expensive construction option, this approach often may not be viable in a bridge replacement project as it usually requires acquisition of new right of way.

4.1.2 Construction of a Temporary Adjacent Bridge

A second option that is available involves the construction of a temporary by-pass bridge adjacent to the existing bridge. Traffic uses the by-pass bridge during the bridge

reconstruction. An example of such a project is shown in Figure 4.1. In this case, the temporary bridge can accommodate only one lane of traffic, thus causing some traffic delays and safety concerns to users. Once the bridge reconstruction is complete, traffic is re-routed to the new bridge and the temporary bridge is disassembled and reused at another project site. Once again, a primary drawback in this approach is the need to either acquire or gain temporary access approval for additional right-of-way. In this case, however, the right-of-way is needed only for the duration of bridge reconstruction.

Figure 4.1 Use of a Temporary By-pass Bridge during Bridge Reconstruction

4.1.3 Bridge Construction Using Low-Headroom Equipment

A third strategy to minimize traffic interruptions involves the use of special low-headroom, limited-access equipment for the bridge construction. This strategy is applicable particularly to the bridge substructure construction. Foundations and bridge piers may be constructed in the limited space available underneath the old bridge using special construction equipment. There is no traffic disruption resulting from this construction as, at the time of construction, the old bridge is fully functional. The same strategy may be used in the reconstruction of bridge abutments. However, in this case, a segment of the old bridge near the abutment must be removed and a short temporary cover installed to span the old abutment. Once the bridge substructure is completed in this manner 1) the bridge may be closed to traffic, 2) the old bridge removed, and 3) the new prefabricated bridge assembled in its place. This strategy does not eliminate traffic interruption completely, but minimizes the impact on the user particularly if different phases of the construction are scheduled properly. Further details of this strategy are presented in Chapter 5 of this report.

4.1.4 Construction in Periods of Low Traffic Volume

In a fourth strategy, interruptions to traffic and user delays are minimized by scheduling construction during low traffic volume periods. The bridge is closed to traffic during construction and therefore, special techniques (e.g., prefabricated components) are used so that the construction can be completed in the shortest time possible. When this

strategy is used, the contractor has a broad range of options from which to select to achieve fast rates of construction. One option may be to mobilize more equipment and manpower and use conventional construction techniques rather than use new, innovative techniques. Accordingly, this strategy is the least demanding in terms of the need for specialized equipment and/or new construction methods with which a crew must develop familiarity. Even though this strategy may not be the most effective in terms of minimizing traffic delays and user costs, it may have the greatest appeal and widest applicability because of the flexibility that it provides.

4.2 CONTRACTUAL ISSUES

Many experienced bridge engineers and contractors are of the opinion that *contracting* holds the key to achieving fast construction of bridges with minimum impact on the users. Issues related to contracting include: (a) offering incentives for early completion and penalties for delayed completion; (b) bundling of small projects when calling for bids and making awards; (c) providing flexibility to the contractor in selecting the project start date; and (d) coordinating the activities well with all involved agencies, such as cities, counties, and utility companies.[4]

It is not currently in the interest of the contractor to speed construction significantly. Incentives are almost certainly going to be required for a contractor to be willing to 1) implement techniques and/or 2) dramatically save time on the duration of a given project. These incentives can be made for 'lane rentals' and/or 'site rentals' where penalties and bonuses are assigned differently, based on whether the entire bridge is shut down or just one lane of traffic is closed. Also, although a maximum seven day closure is assumed, distinctions can be made between shutting down the bridge for one day each week for seven weeks versus seven straight full days.

A contractor typically accumulates profit by 1) ensuring personnel are working and 2) receiving payments for their work. Most of the innovative systems proposed in this report switch labor hours from the field to the fabrication yard. Thus, a given contractor is likely to be reluctant to accept the changes needed, unless he/she can be ensured a substantial amount of similar future work. In addition, precast plants will not want such changes unless a significant amount of additional profitable work is anticipated. That is, if each individual bridge system built requires numerous variations, then the projects generally will not be considered worth the effort and/or tooling costs required by a precast plant. Conversely, if a precast plant had a high confidence level that a substantial amount of similar future work would soon be let, then even if the adopted strategy required the plant (or fabrication shop) to totally re-tool, it is likely they would do so. Otherwise, without a significant amount of promised future work, any precast plant and/or contractor will have to charge a high premium for any significant variation to their current work patterns.

[4] Again, many of these contractual "issues" were identified in conversations with Jim Abrams, Jr. of Austin Prestress, Austin, Texas.

Owners, such as TxDOT, who wish to save substantial amounts of time on these types of construction projects, will likely have to pass significant monetary incentives to the contractors and precast plant operators. Another obvious alternative for TxDOT is to require a particular bridge to be built in (say) seven days. The problem with this latter strategy is that a contractor working with standard bridge procedures may not be able to meet the deadline. He/she will know this before the project even begins. Thus, the resulting bid will be inflated in order to cover any penalties that may be incurred, but no real effort toward a substantially reduced construction time will be made.

In summary, it is apparent that unless significant monetary incentives and a substantial amount of similar future work are promised by TxDOT, key responsible parties, e.g., contractors and precast plant owners, will not likely adopt the changes needed to substantially reduce the time required for construction of off-system bridges.

CHAPTER 5

PROPOSED SUBSTRUCTURE SYSTEMS

5.1. INTRODUCTION

Chapter 4 provided an overview of general strategies that may be used to achieve minimum disruption of traffic during bridge replacement projects. Among the strategies presented in that chapter, strategies (a) and (b) are not discussed here in further detail as these strategies avoid traffic interruption either by shifting the location of the new bridge or by constructing a temporary bypass bridge. In either case, a bridge remains open to traffic to use during the extent of bridge reconstruction. Therefore, when these strategies are used, there is no need for new and innovative methods to expedite construction. For this reason, the detailed review presented here concentrates on strategies (c) and (d) only.

This chapter deals with the *bridge substructure.* It presents alternative designs and innovative construction methods that can be used in the construction of various substructure elements such as the foundation systems, piers, abutments and bent caps to minimize the impact on the traveling public. The *bridge superstructure* is examined in the next chapter, where specific bridge superstructure configurations, designs and methods of erection that will help minimize the road closure time during construction are presented.

At the outset, it should be noted that the optimum substructure design for a given project can only be selected after careful evaluation of numerous project-specific factors. Such factors include soil and geologic conditions, site accessibility conditions, traffic conditions, design loads, contractor capability, cost considerations, etc. It should also be noted that a detailed design of various substructure elements cannot be accomplished until complete geotechnical information corresponding to that specific site is known. This is particularly true for the foundation system. In other words, the depth, the diameter, and the number of piles or drilled shafts can be determined only after necessary data have been collected through appropriate geotechnical exploration and testing. For this reason, the substructure systems proposed in this chapter are limited to generic systems, strategies, and construction methods rather than to specific designs. Section 5.2 below provides a detailed discussion of those factors that influence the design and construction of the bridge substructure.

5.2 FACTORS INFLUENCING THE SUBSTRUCTURE DESIGN STRATEGY

5.2.1 Soil and Geologic Conditions

Soil and geologic conditions at the site are foremost among the factors that must be considered in the search for the optimum bridge foundation system in terms of reliability, construction expediency, and economy. Spread footings (i.e., shallow foundations) are economical and easy to construct under limited access situations, but their feasibility is limited to sites where the bedrock is found at shallow depths. These conditions are the

exception rather than the rule and, therefore, at most project sites shallow foundations are not considered to be viable. As a result, the primary thrust in the search for foundation systems that would enhance the speed of construction has been placed on deep foundations. Among the types of deep foundations, the two most widely used are drilled piers (drilled shafts) and driven piles. These two types of deep foundations have a long history of use within the state. As a result, the industry has developed a great deal of experience in the installation of these two types of deep foundations. For these reasons, drilled shafts and driven piles are treated as the basis for any new and innovative foundation systems proposed.

The decision between driven piles and drilled shaft foundations is largely governed by soil and geologic conditions. Soft soil conditions and a high groundwater table generally favor driven piles. This is because of difficulties associated with drilling and maintaining an open auger hole under these site conditions. These difficulties for a drilled shaft can be overcome if a casing or slurry is used. Nevertheless, these additional steps in the construction process and the increased cost make drilled shafts a less attractive option to use when soft soils or a high water table are present. In contrast, when stiff soil conditions are present, drilled shaft foundations are preferred over driven piles, although piles can be installed in such conditions in predrilled holes.

Another important soil parameter that may impact the choice of the type of foundation is soil corrosivity. Soils that have a low pH and/or high electrical conductivity increase the potential for corrosion of steel. Therefore, H-piles and steel pipe piles are not generally suitable for such a soil environment. This problem, however, may be addressed by (a) increasing the thickness of the steel section to allow for corrosion, (b) providing a protective coating (e.g., tar or epoxy), or (c) providing a cathodic protection system. All of these remedial measures, however, contribute to an increase in construction costs. A similar problem arises due to high sulfate content in soils. When the soil or the groundwater has high concentrations of sulfates, they react with cement to form a chemical product known as *ettringite*. Ettringite crystals grow, expand, and cause cracking and disintegration of concrete. If the soil and water laboratory tests indicate the presence of high sulfate content, then the mix design for the concrete used in the foundation must be modified accordingly.

5.2.2 Site Location and Accessibility

Site location and accessibility both have a significant influence on the choice of the optimum design of the bridge substructure. If the project site is located in an urban environment, the noise and the vibration associated with a traditional driven pile installation may not be acceptable. In these projects, the environmental noise restrictions must be met by using other types of foundation systems (e.g., drilled shafts) or by using specially designed pile drivers with pile hammer silencers. In these pile drivers, silencing is achieved by shrouding the impact zone between the hammer and the pile top with a soundproof casing. Certain vibratory drivers that produce less noise may also be used.

Another important factor that must be taken into consideration is site accessibility. Many off-system bridges are located in remote areas and the roads leading to these bridges can have narrow widths, sharp curves, and/or steep grades. Therefore, the site may not be

accessible to some large pieces of construction equipment. Also, the distance from the nearest concrete ready mix plant can be great.

Accessibility conditions *at* the project site have an equally important bearing on the selection of a suitable design and the method of construction of the bridge substructure. For example, if the bridge is to be constructed over a waterway and piers are needed, then the type of pier foundations and the method of installation must be selected accordingly. Decisions must be made whether foundations will be installed in water or under dry conditions where the construction area is isolated using cofferdams and dewatered. In the latter case, the choice with regard to a type of cofferdam will depend on the depth of water. There are additional constraints if the waterway has been designated as *environmentally sensitive.* Then the design and the construction procedures must be selected so that the bridge erection can take place without interference to the waterway. Generally, under these circumstances, construction equipment is not allowed in the waterway.

Another important site access factor is the amount of headroom available beneath the existing bridge. If adequate headroom is available, then the designer may consider the option of constructing the pier foundations while the old bridge is still in service. Thus, the foundation system and the piers can already be in place by the time the old bridge is demolished. Then the time required for the construction of the foundations and piers can be saved, resulting in a significant reduction of the *bridge closure time.* In addition to the factors discussed above, the general topography at the site may dictate the type of construction equipment that can be used and where it may be positioned to achieve the best construction efficiency.

5.2.3 Equipment Availability and Contractor Capability

One obvious way to achieve greater construction expediency is through the mobilization of more equipment and the use of more manpower at the jobsite. For example, if several pile drivers can be mobilized at different abutments and piers simultaneously, rather than using a single pile driver at one abutment or pier at a time, then the foundation construction time can be significantly reduced. However, before such a construction schedule can be finalized, one must evaluate whether the local contractors are capable of providing the extra resources needed. Also, it will be necessary to examine the extra cost associated with the use of such extra resources. Similarly, many of the construction procedures that help expedite construction and reduce bridge closure time involve the use of special construction equipment. Examples of such special construction equipment include low headroom augers for drilled shaft installation, low headroom pile drivers, and inflatable cofferdams designed for rapid installation. However, before a particular design and a method of construction can be selected for a given project, it will be necessary to evaluate the local contractor experience and capability to perform such specialized tasks.

Another important consideration related to equipment stems from the general observation that the use of larger capacity construction equipment will not be cost effective in many small off-system bridge construction projects. Smaller equipment can be mobilized easier and can allow faster construction as well. Additionally, the roads leading to some of the remote off-system bridge construction sites may not provide access to large construction

equipment and transport vehicles. Therefore, the weights of various prefabricated elements must be selected so that smaller-capacity cranes can lift and move them. Similarly, the lengths of various prefabricated components (such as piles) may have to be limited so that they can be transported to the site without difficulty.

5.2.4 Traffic Volumes and Potential Detour Routes

The need to minimize road closure time during replacement of a bridge becomes more and more important as the volume of traffic on the bridge increases and the detour routes around the site become longer. A review of the NBIS database on off-system bridges in Texas (see Appendix A) reveals that the traffic volumes associated with off-system bridges can vary significantly. For example, the estimated Average Daily Traffic (ADT) on the *Woodway Bridge* in the City of Houston is 50,000, while the ADTs on many off-system bridges in remote locations within the state are less than 50. The user delays associated with the closure of these bridges will also vary accordingly. A second important factor that influences user delay is the length of detour routes around the closed bridge construction site. Thus, the user delays resulting from the closure of a bridge located in a remote area can be high, not because of the high ADT, but because of the extra driving time needed to cover the long detours. Under these circumstances, one may consider a bridge replacement strategy that will allow one lane to be kept open for traffic through most of the construction process. Other traffic-related factors that must be considered include traffic patterns and the availability of alternative routes for emergency vehicles and school busses. In many cases, construction activities that require complete closure of the bridge may be scheduled for weekends in order to minimize the impact on the user. This decision, however, can only be made after studying the traffic patterns over the bridge.

5.2.5 Required Loads

The magnitude of the loads to be carried by the bridge substructure will have an impact on the choice of a suitable design and selection of both the construction method and equipment to be used. The loads will increase as the number of traffic lanes on the bridge, the length of span and the design traffic loads increase. In the design of foundations, increased loads can easily be accommodated by increasing the depths and diameters of the drilled shafts or by increasing the number of piles in the pile groups that support those loads. However, with increased loads some of the unconventional foundation systems such as minipiles and screw piles may be found to be uneconomical. Therefore, with higher loads one may not be able take advantage of the construction efficiencies that these unconventional foundation systems offer. Furthermore, the construction of larger and heavier components of the bridge substructure will likely require larger capacity pieces of construction equipment, which in turn may influence the construction speed.

5.3 ALTERNATIVE SUBSTRUCTURE DESIGN AND CONSTRUCTION STRATEGIES

5.3.1 Overview

This section documents the findings from a review conducted in this research to identify alternative bridge substructure designs and construction methods that can be used to minimize user delays during bridge replacement projects. It must be noted here that this section does not identity a specific substructure design or designs for a bridge with a given span and/or loading. Instead, it describes many different options that are available and that may be considered in the design of the bridge substructure. Once the site specific information pertaining to a particular bridge construction project is available, these options can be evaluated on the basis of this information and the optimum design can be selected.

5.3.2 Foundation Systems

5.3.2.1 Use of Special Low-Headroom Construction Methods

The construction of the bridge substructure begins with the installation of foundations for the piers and the abutments. If sufficient headroom is available beneath the old bridge, then work on the construction of pier foundations can begin while the old bridge remains in service. If the available headroom is not quite adequate, then it may be possible to create the necessary headroom by making a temporary, shallow excavation. This option for foundation construction requires the use of special low headroom equipment. Figure 5.1 is a schematic illustration that shows how such low headroom equipment may be used to construct pier foundations while the old bridge is still in place.

A variety of special construction equipment and construction techniques are available for the installation of deep foundations in areas of limited headroom and access. The rig shown in Figure 5.2 can operate in a limited space that is 3-foot wide and 3-foot high and has the capability to drill holes up to 18 inches in diameter and 20 feet in depth. Figure 5.3 shows a 6-foot 9-inch headroom specialty rig with the capability to drill 60-inch diameter 75-foot deep auger holes for drilled shaft installation. There are other specialty rigs that can drill holes as large as 69 inches in diameter with a bell diameter of 90 inches and with a depth of more than 80 feet but requiring a headroom of 13 feet.

Similar limited-headroom equipment is available for driven pile installation as well. In such pile driving operations, piles are driven in short segments (sometimes as short as 5 feet). Once a pile segment has been driven into the soil, the next segment is spliced on to the first segment and driving is continued. Figure 5.4 shows a special vibratory driver that allows piles to be installed in limited headroom conditions. Also, Figure 5.5 is a vibratory driver that can be attached to an excavator. These pieces of equipment can fit in very tight spaces and the smallest viable headroom may be controlled by the length of the pile segment.

Limited headroom pile driving has been used to retrofit existing bridge foundations. Figure 5.6 shows an example of such a retrofit operation. In this example, a limited headroom pile driver is being used to retrofit pier foundations for the San Francisco-Oakland Bay Bridge in California. This project used 24-inch-diameter by 0.75-inch-wall steel pipe

piles that were driven around each of the existing pile caps. The new piles were then connected to the old cap by encasing the old cap and the new stiffening piles in a larger concrete cap with heavier reinforcement. Figure 5.7 shows the new piles being installed around the old pile cap. Figures 5.8 and 5.9 illustrate the various steps in the construction schematically.

The construction procedures described above can be used effectively for the installation of pier foundations while the old bridge remains in service. These methods can be used either to construct new foundations or to retrofit old foundations and piers and use them for the new bridge. It must also be noted that, in addition to conventional drilled shafts and driven piles, many other deep foundation systems are available in the construction industry today. These alternative types of foundations (e.g., minipiles, micropiles, pinpiles, and screw piles) are generally smaller in size (diameter and depth) and can be installed with smaller rigs that can operate with even more limited headroom and space. They are faster to install and generate less noise, vibration, and disturbance to adjacent structures. These foundations have smaller load-carrying capacities but are adequate to meet the needs of many off-system bridge foundations.

5.3.2.2 Foundation Installation on Both Sides of the Existing Bridge

In addition to construction of the foundations underneath the existing bridge using low headroom equipment, the possibility exists for constructing the initial portions of the foundations on the two sides of the existing bridge (See Figure 5.9). This approach may be applicable even in situations where the new bridge is to be no wider than the old one. One option is to construct the foundations for the piers and abutments on the two sides of the bridge and to use these as supports for the bent caps and abutments. If this option is used, there will be no headroom limitations. However, construction will likely take place very close to the existing structure and, therefore, some restrictions with respect to access may apply. Except for such restrictions, construction can proceed using conventional equipment and methods. However, special designs for the completion of the bent caps and abutments will be needed. A second option that may be considered is to combine the piers constructed outside the existing structure with one or more piers constructed underneath the existing structure to support the new bent cap.

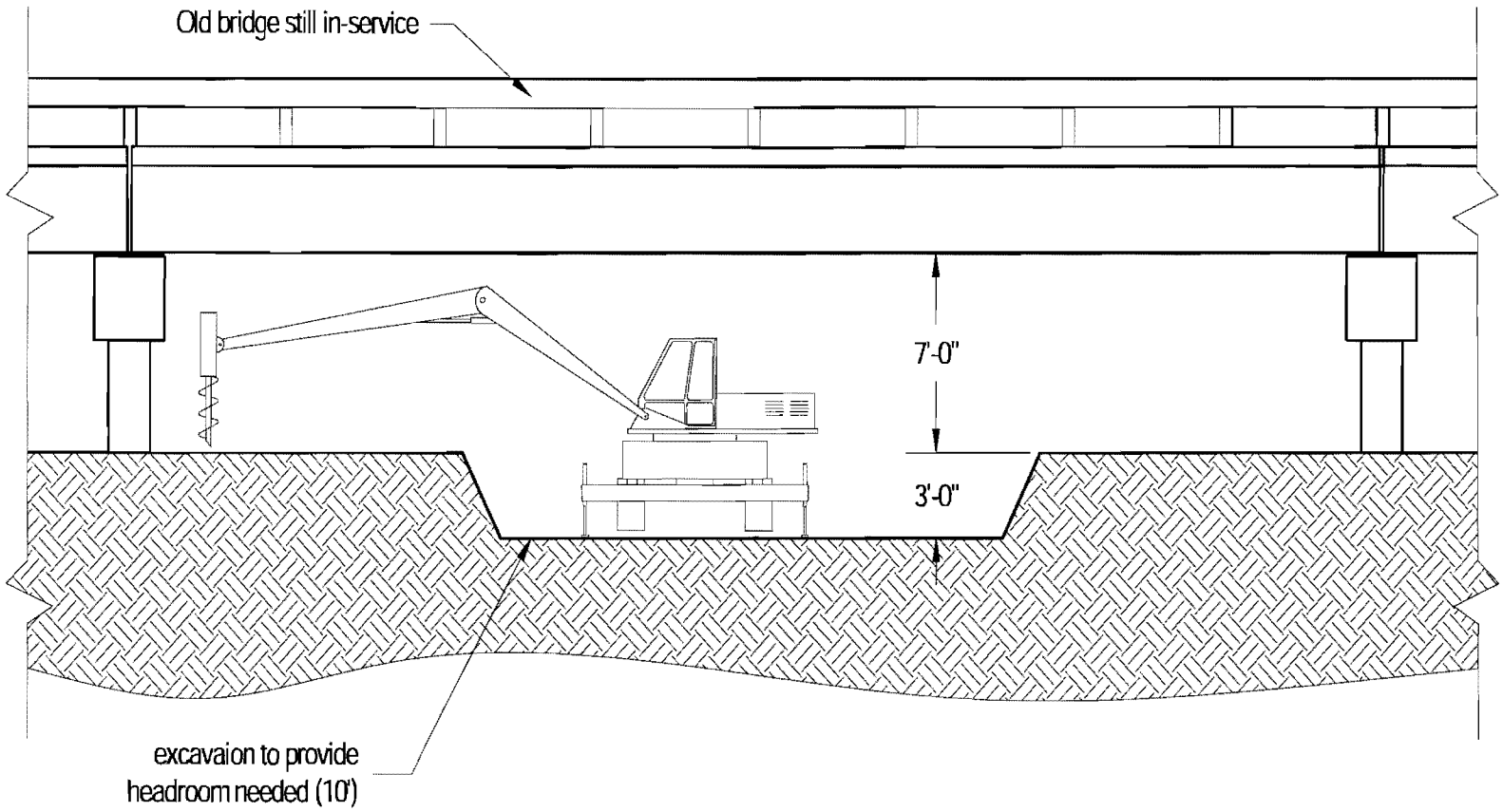

Figure 5.1 Use of Special Low-Headroom Equipment to Construct Pier Foundations

Figure 5.2 3-foot-wide, 3-foot-high Specialty Rig Drills Holes up to 18-inch Diameter and 20-foot Depth
(Source: S & W Foundation, Richardson, Texas)

Figure 5.3 5-foot 6-inch-wide, 6-foot 9-inch-high Specialty Rig Drills Holes up to 60-inch Diameter and 75-foot Depth
(Source: S & W Foundation, Richardson, Texas)

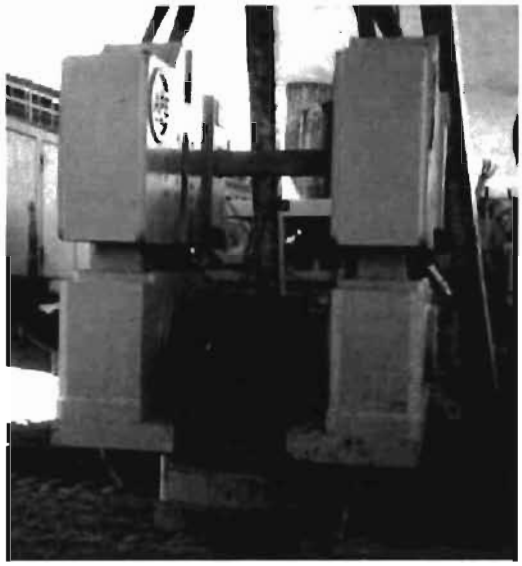

Figure 5.4 Special Vibratory Pile Driver for Low Headroom Applications

Figure 5.5 Robotic Vibratory Pile Driver Attached to an Excavator

Figure 5.6 Use of Limited Headroom Pile Driver in the Retrofit of Pier Foundations in the San Francisco-Oakland Bay Bridge
(Source: bbuckland@mandelpipe.com)

Figure 5.7 Installation of Additional Piles around Old Pile Cap
(Source: bbuckland@mandelpipe.com)

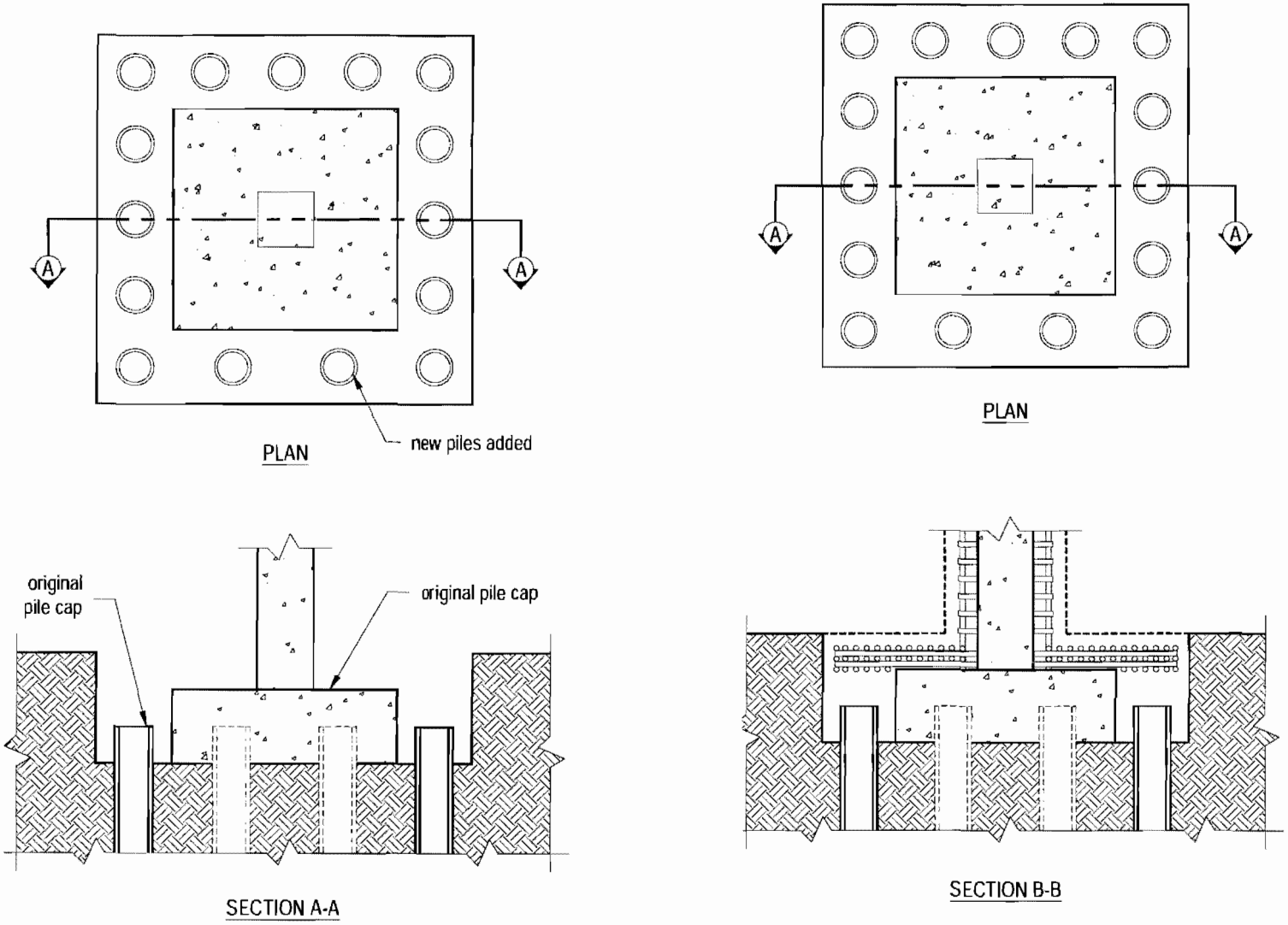

Figure 5.8 Retrofit of a Pier Foundation with Driven Piles

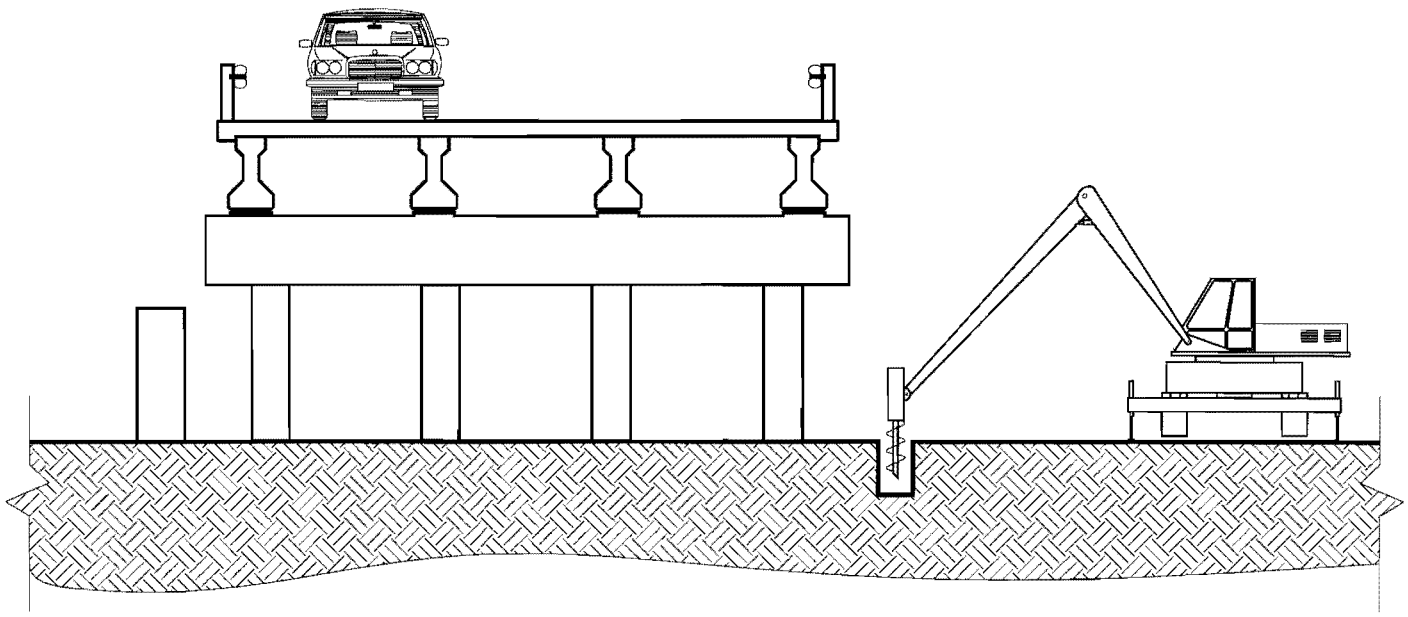

Figure 5.9 Construction of Foundations on the Sides of the Existing Bridge.

5.3.3 Bridge Abutment and Wing Wall Construction

5.3.3.1 Construction of Abutments While Keeping the Bridge Open to Traffic

The strategies described in Section 5.3.2.1 and 5.3.2.2 allow construction of portions of the foundation systems for the piers and abutments for the new bridge while the old bridge is still in service. In this manner, interruption to traffic due to the construction of these substructure elements is avoided. Completion of the construction of the new abutments while keeping the bridge open to traffic is more difficult. Figure 5.10 shows how this may be achieved with the help of temporary supports and a temporary bridge element. Figure 5.11 shows a photograph of the type of temporary bridge that may be used. Once this temporary support and bridge are in place, the old abutment may be removed and the construction of the new abutment and its foundation can be completed.

5.3.3.2 Alternative Methods for Faster Construction of Abutments

The traffic volumes and detour distances in many off-system bridges may not justify the use of the construction procedure outlined above. Alternatives to this are: (a) scheduling construction of the abutments during low traffic volume periods, such as during weekends or night times; and (b) constructing the abutments on one side of the bridge while the lanes on the other side remain open to traffic. In either case, it is desirable to complete construction in the minimum time possible. Conventional practice for bridge abutment and wing wall construction involves formwork and cast-in-place concrete. The installation of formwork and the placement of reinforcement are time-consuming tasks. In addition, sufficient curing time must be allowed for the concrete to harden and gain strength after each stage of construction.

An alternative method that is used commonly in Europe for fast construction of bridge abutments involves permanent steel sheet piles. Figure 5.12 shows a bridge in which sheet piles have been used for a bridge abutment and its wing walls.

In the U.S., steel sheet piles are often used as temporary structures but their use as permanent structures is not common. Sheet pile walls offer several advantages over conventional cast-in-place concrete bridge abutments: (a) they eliminate the need for separate foundations as they serve as the load-bearing element for the vertical loads as well as a wall providing lateral resistance; (b) they are faster to install, saving the time taken for formwork and placement of reinforcing steel as well as the curing time; and (c) if water is present, the installation does not require cofferdam construction.

Steel sheet pile walls offer many options to the designer. For example, if standard corrugated sheet piles are not sufficiently stiff, combined wall systems using special H-beam or box piles can be used. In soft soils, longer sheet piles or box piles can be driven to achieve the desired bearing capacity. Another option that is available in short span bridges is to use the concrete bridge deck as a strut for the sheet pile, thus eliminating the need for anchors.

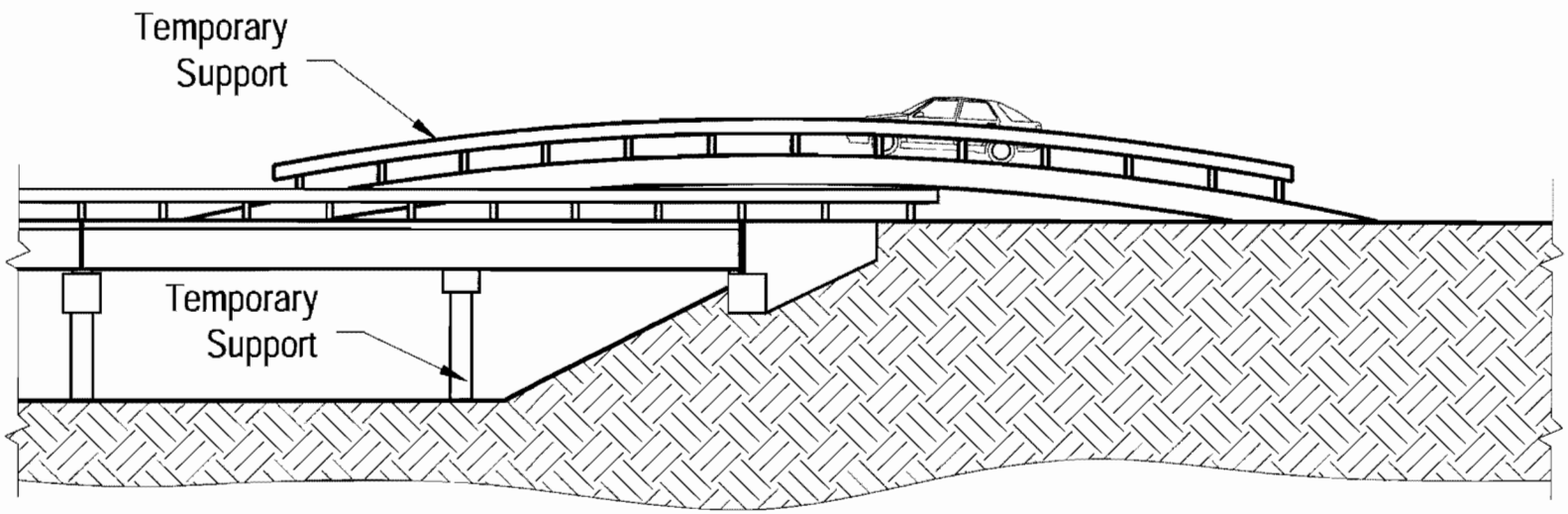

Figure 5.10 Constructing Abutments while Keeping the Bridge Open to Traffic

Figure 5.11 Temporary Bridge in Use During Bridge Reconstruction

Figure 5.12 Use of Permanent Steel Sheet Pile Walls for a Bridge Abutment (Source: Steel Construction Institute, UK)

The primary concern with permanent steel sheet pile wall construction is *corrosion*. This concern can be addressed by: (a) designing the structure using reduced section properties, thus allowing for loss of material due to corrosion; (b) using protective coatings; and (c) providing cathodic protection.

When constructing the bridge abutments using construction only on one side of the bridge with lanes on the opposite side open to traffic, many of the traditional designs and construction methods may be used. However, the equipment and construction methods must be appropriate for use in a limited workspace. Thus, it can be expected that the smaller-capacity equipment and alternative construction methods described in previous sections, such as minipiles, micropiles, pressure injection piles, etc., will be effective in this application.

5.3.4 Bridge Pier Construction

This section describes the different options available for the construction of bridge piers. Not all options are applicable in a given bridge replacement project. The method selected for bridge pier construction must be compatible with the strategies selected for the construction of other elements such as the foundations and the bent caps.

5.3.4.1 Use of Prefabricated Piles as Bridge Piers

Many off-system bridges that have been built with conventional methods do not have piers as a separate substructure element. Instead, they use prefabricated piles or "trestle piles" that serve both as foundations and as piers. The bridges on County Road 569 at Oyster Creek (See Figure 5.13) and on Hunt Road at Bessie's Creek (See Figure 5.14) in the Houston District are examples of off-system bridges where prefabricated piles have been used in this manner. Both of these bridges use 16-in-square concrete piles driven to a depth of 70-feet. This type of construction saves pier construction time and, therefore, is a good

construction strategy that should be considered. However, this method is limited to project sites where soil conditions favor pile driving. Furthermore, this type of foundation and pier installation is not very practical for use in limited headroom situations. However, this method is a viable candidate in projects where the overall strategy for minimizing traffic interruptions involves closure of the bridge during low traffic volume periods and using fast construction methods to erect the new bridge.

5.3.4.2 Use of Prefabricated Box Piers

Another method that can used to increase the speed of pier construction involves the use of prefabricated pier segments. These prefabricated pier segments consist of high performance concrete hollow core units. They are assembled over a cast-in-place concrete foundation and are vertically post-tensioned to the footing. Figure 5.15 illustrates two separate designs of prefabricated piers that have been used in previous bridge construction projects. The box pier and bent cap system shown on the left was used in the construction of overpasses over Baldorioty de Catro Avenue in Puerto Rico and in a pedestrian bridge near Manhattan, New York City. The design shown on the right was used in the Texas SH 249 Louetta Road overpass in Houston and in the Texas U.S. 183 elevated ramp at I-35 in Austin.

5.3.4.3 Conventional Cast-in-Place Construction

Conventional cast-in-place construction of bridge piers can be used with no negative impact on overall project progress when the construction of the foundations and the piers takes place while the old bridge remains in service. Accordingly, drilled shafts or piles are placed underneath the existing bridge using special low headroom equipment and then piers

Figure 5.13 Off-system Bridge on County Road 569 at Oyster Creek

Figure 5.14 Off-system Bridge on Hunt Road at Bessie's Creek

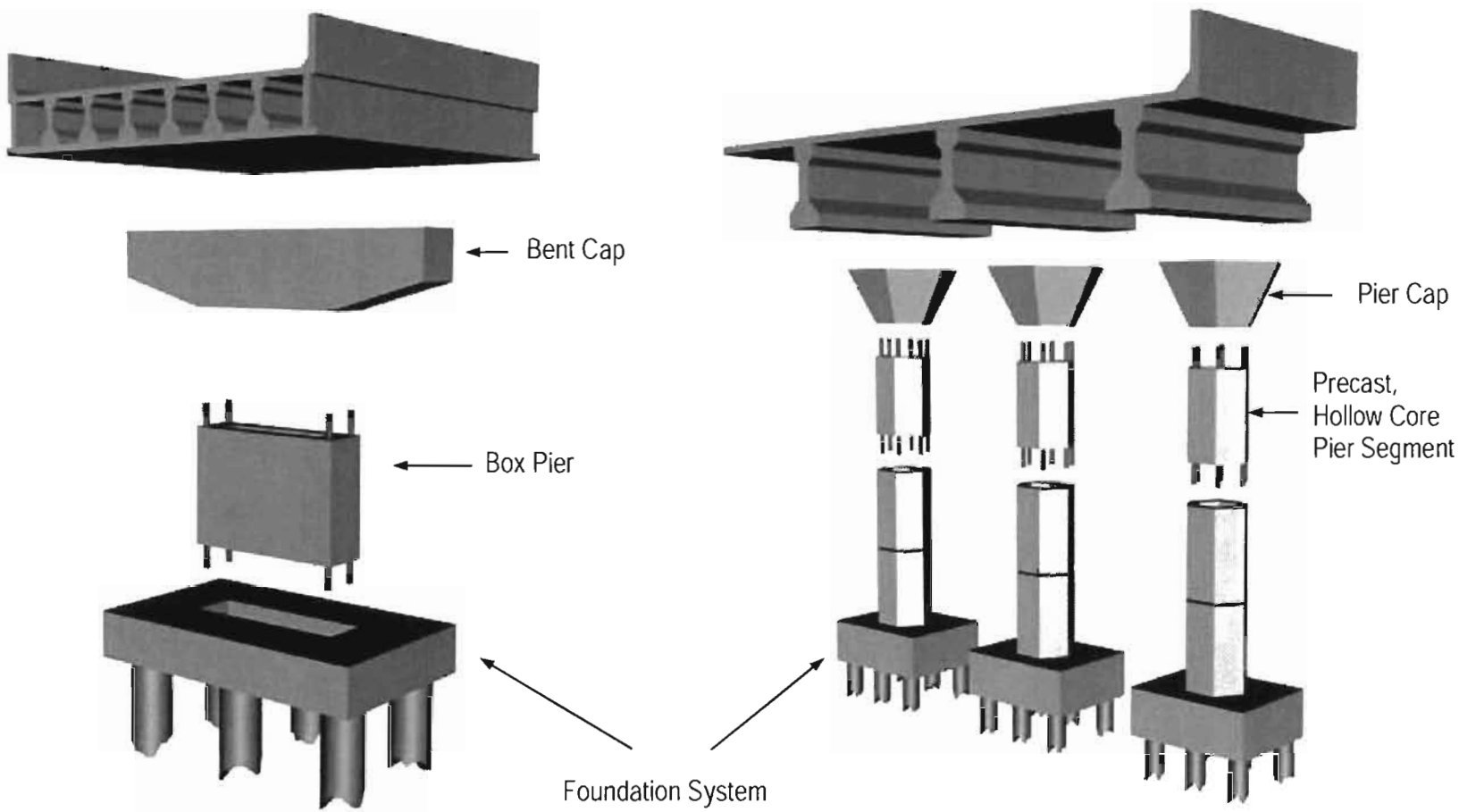

Figure 5.15 Prefabricated Pier Systems

are constructed over the drilled shaft foundations or pile caps using traditional cast-in-place reinforced concrete construction methods.

5.3.5 Bent Cap Construction

Bridge construction times can be greatly reduced by using prefabricated bent caps. Cast-in-place concrete bent caps are commonly used by TxDOT. They usually have rectangular or inverted "T" cross-sections and require extensive formwork, labor, and curing time, all of which significantly add to the time of construction and have the potential to significantly add to the time of bridge closure. Use of prefabricated bent caps, made either of concrete or steel, can remove the fabrication time from the critical path of construction and thus can minimize the bridge closure time. In addition, better quality control can typically be achieved with elements prefabricated in a controlled environment.

TxDOT has successfully used prefabricated bents caps and has the required technical expertise to implement this concept. A part of TxDOT's expertise has been developed through research projects such as Project No. 0-4176, "Precast Bridge Construction Systems," conducted in the late 1990s. Two recent examples where precast concrete bent caps were successfully used are the I-45/Pierce Elevated freeway in Houston and the SH66/Lake Ray Hubbard crossing near Dallas. In addition, prefabricated steel box bent caps have been used in Texas where longer bent cap spans exceed the capabilities of conventional reinforced concrete bent caps. Standard steel box beam details are available from TxDOT (TxDOT, 2001).

Bent caps are not of primary importance to this research project as the single-span off-system bridges being addressed typically span from abutment to abutment. Should multiple-span bridge crossings become necessary or of interest, they will require interior supports, and the precast bent cap construction techniques could then be applicable.

5.4 SPECIFIC SUBSTRUCTURE DESIGNS FOR THE SELECTED 50-FOOT AND 90-FOOT SPAN BRIDGES

Previous sections of this chapter identified several innovative approaches that can be used in the construction of various substructure elements to expedite construction and minimize the closure time during replacement of a "typical" off-system bridge. As discussed previously, TxDOT has narrowed the scope of this research project by specifying only two general off-system bridge cases. Both cases consider a single span bridge crossing a streambed with a 24-foot roadway. One case is for a 50-foot span which allows access of equipment in the streambed, while the second case is for up to a 90-foot span without equipment access in the streambed. In both of these bridges, the approach and bridge lanes consist of only two 12-foot wide lanes, and the out-to-out width of the bridge is 26-feet (with guard rails).

The final step in this review focuses on the evaluation of various substructure construction strategies discussed earlier to identify optimum substructure designs for the selected 50-feet and 90-feet span bridge cases. Since both of the bridges in question are

single span structures, construction of bridge piers in the streambed is no longer relevant. Accordingly, the primary focus of this evaluation is shifted to the construction of abutments. This section presents the most workable construction methods for off-system bridge abutment construction for the two cases previously described.

The substructure evaluation is based on following considerations:

(a) It is assumed that the owner has limited financial resources, and the least expensive structure consistent with rapid installation is desired.
(b) The hydraulic profile in the existing channel or streambed must be preserved or increased. Based on this constraint, it is assumed that the new abutments may not be constructed *inside* (toward the center of the streambed) the existing abutments.
(c) The bridge sites are assumed to be rural and even remote, and have a limited right-of-way (ROW), with no opportunity for a temporary bridge or realignment of the roadway.
(d) Assume a *short term* detour route is available that would allow construction to occur for short periods of time with closure of the bridge. This would be limited to low traffic volume periods such as weekends, nights or holidays. However, *long-term* use of the detour is assumed to be unacceptable and therefore, the bridge closure time must be kept to a minimum.
(e) It is assumed that the reuse of any portion of the existing bridge will not be considered (i.e., the abutments) in the construction of the new bridge. This precludes the option to strengthen or retrofit existing abutments (as discussed in Section 5.3.2.1 of this report).

5.4.1 Construction of Abutments with Partial Bridge Closure

To avoid *long term* use of detour routes during bridge replacement, construction of the abutment foundations and caps is assumed to be conducted while at least one lane of traffic is open at all times on the existing bridge. Optionally, or in conjunction with this previous approach, all or a portion of the substructure construction can be conducted during low traffic volume periods such as during weekends, nights or holidays, assuming an appropriate *short term* detour route is available.

The overall time for bridge construction and bridge closure can be kept to a minimum when at least a portion of the abutment and its foundation system can be completed while the old bridge remains in service. To accomplish this, the abutments and any associated earth retaining structures or wing walls for the new replacement bridge must be constructed *outside* the existing structure. One strategy that allows construction of the bridge abutment and foundations with only partial bridge closure (i.e., one lane remains open) involves the construction of the new abutments and their foundations behind the existing abutments. Accordingly, the new abutments are offset from the old abutments longitudinally. This will obviously result in an increase in the bridge span. For this reason, it is desirable to position the new abutments as close to the existing abutments as possible. This will also minimize any changes in the hydraulic profile. On the other hand, however, a sufficient distance should be maintained between the new and existing abutments to:

(a) Minimize the possibility of any damage to the new foundations or structures during demolition of the old bridge, or during excavation related to the new bridge construction.
(b) Eliminate the possibility of undermining any new shallow foundations, or disturbing any lateral or axial support for any new deep foundations.
(c) Provide adequate and safe working room for personnel and equipment to perform demolition of the existing bridge foundations and structures, excavation, and construction for the new abutment and associated earth retaining structures, if applicable.

When the abutments and their foundations are constructed in the manner described above, the traffic lane (or lanes) on one side of the bridge will be closed. The installation of foundations and cast in place construction of the abutment and approach slab will take place on the side of the bridge closed to traffic. Construction can proceed on both ends of the bridge. Once the cast-in-situ components are ready to receive traffic, lanes on that side can be opened and construction of the foundations, abutments and approach slab can begin on the other side.

5.4.2 Construction of Abutments without Closure of the Old Bridge

An alternative approach that will help reduce bridge closure times even further involves construction of the abutment foundations on either side, i.e., laterally, of the bridge approach. In this construction scheme, the abutment is supported by only one deep foundation support element located at each end of the new abutment. This scheme eliminates the need for any drilled shafts or driven piles to be installed through the existing pavement. This speeds the foundation installation as only four support elements are required for the new bridge. This also enhances site safety by minimizing the amount of time men and equipment are required to be working on the roadway. The time required for a bridge or lane closure is also minimized. One disadvantage with this scheme is that the abutment cap needs to be significantly larger, deeper and thus heavier than a typical cap supported by intermediate foundation elements.

Precast or prefabricated foundation components such as concrete piles and abutment caps should be strongly considered for either construction scheme. This speeds the construction process by eliminating or minimizing the need for cast-in-place (CIP) concrete construction, and enhances safety by minimizing the time workers and equipment must be present in a potentially dangerous work environment associated with a lane or bridge closure. Thus, the suggested substructure construction procedure is as follows:

After the abutment caps are set in place, the following tasks may commence:
(a) Demolition of the existing bridge
(b) The old abutments and their foundations, abutment walls, wing walls may be left in place or, if a larger hydraulic profile is desired, they may be removed and new abutment and wing walls constructed at a later date.
(c) Excavation and grading associated with the new bridge project.
(d) Installation of the new bridge superstructure.

(e) Installation of any new earth retaining structures or systems. To replace old abutment and wing walls, soil nails and shotcrete wall facing may be used.
(f) Installation of slope and erosion protection (if needed).

CHAPTER 6

PROPOSED SUPERSTRUCTURE SYSTEMS

6.1 INTRODUCTION

Following the review of the standard TxDOT and special state-of-the-art superstructure systems presented in Chapter 3, an attempt has been made to determine the best new superstructure system, or combination of systems, for the two prototype off-system bridge cases specified by TxDOT for this project. The "new superstructure systems" are not required to exclude components or procedures from the past, only to expedite the construction and minimize the closure time in a manner that has not been routinely implemented in the past. Thus, "innovative design" is not necessarily any more important than "innovative construction methods" in the systems developed, especially in the prototype case of a 90-foot single span without access to the streambed. Nevertheless, the construction method approach allowed and presented in this chapter is indeed innovative. In addition, the use of full-depth, full-width deck panels, as well as the extensions of the "channel bridge" should be regarded as innovative designs.

The systems discussed in this chapter are restricted to the following conditions with regard to the bridge sites, loads, and geometric and cost considerations.

1. The bridge sites are assumed to be rural, even remote, and to have limited right of way, with no opportunity for a temporary bridge or realignment of the roadway. Thus, the size of the equipment to be used is considered to be limited, and the local construction contractors are assumed not to have access to, or to be familiar with, the most specialized equipment available today. However, it is assumed that there is access for a small crane at both ends of the bridge.
2. The approach and bridge lanes are assumed to consist of only two 12-foot-wide lanes, and the out-to-out width of the bridge generally is 26-feet.
3. The superstructure construction is assumed to occur after the original bridge has been demolished and the two abutments are in place and ready to support the superstructure.
4. The new bridge is to be designed for AASHTO HS-20 loading with a minimum structural depth to preserve or increase the hydraulic profile.
5. It is assumed that the owner has limited financial resources and the least expensive superstructure consistent with rapid installation is desired.

In rare cases, the assumption of access of small cranes to both ends of the bridge might not hold true. These would be instances in which:

a. the area on one side of the bridge would be landlocked (i.e., no alternate route would be available for the crane to travel to that side),
b. the existing bridge would be incapable of supporting the weight of even a small crane prior to being demolished, or
c. access to the streambed would be denied.

Such instances would require special measures to position a crane on the landlocked side. The above listed conditions illustrate the value of being able to utilize small pieces of construction equipment instead of the largest pieces available today. The limited space at the site and the limited finances of the owner also reinforce this preference. One or more of the above-stated conditions precludes the use of some of the systems discussed in Chapter 3. Thus, TTU researchers have focused on innovative design and construction methods that specifically address the particular requirements of the two TxDOT "off-system" bridge prototype bridge replacement cases.

The goal for the superstructure construction, regardless of the amount of time required for the abutments to be ready, is for the superstructure to be placed and ready for use, at least for one lane of traffic, within one day. The goal is also to have both lanes open within two days.[5]

Two basic superstructure schemes are presented in this chapter. The first is referred to as PCP_{ffwd} or "*PCP: fast-forward,*" where *PCP* refers to precast concrete panels, the first *f* is for fast construction, and *fwd* stands for full-width and full-depth panels. The second solution, referred to as the "*shallow-channel*", is a derivation of the precast concrete segmental Channel Bridge, patented by Mr. Jean Muller of Paris, France. Modifications to this patented concept have been made to match the off-system bridge criteria, courtesy of Mr. Muller and Mr. Daniel Tassin, P.E., of International Bridge Technologies, San Diego, CA.

Both solutions are applicable to both of the prototype bridge replacement cases, although some adjustments in construction techniques are obviously required for the 90-foot span without access to the streambed. Both schemes also involve innovative full-width, full-depth segmental precast deck units. The basic difference between the two schemes is that one utilizes traditional I-beams (concrete or steel) with composite action between the deck panels and the I-beams established with either shear pockets or bolt-down connections, whereas the other scheme utilizes *shallow-channel* bridge segments that are prestressed or post-tensioned transversely at the precasting yard and post-tensioned longitudinally at the construction site. One of the main innovations for the first system is the launching the I-beams for the 90-foot span with small (≤ 30-ton capacity) cranes and erection beams. The main innovation for the second system is the adaptation of the patented channel beam concept to the spans, loads, and restrictions required for this research project.

6.2 PRESTRESSED FULL-WIDTH, FULL-DEPTH DECK PANEL CONCEPT

The first proposed superstructure system utilizes slightly modified traditional longitudinal I-beams, either of prestressed concrete or steel, acting in composite action with prestressed full-width, full-depth deck panels. The most current version of the concept is illustrated in Figures 6.1 through 6.3 which, respectively, show conceptual drawings of the bridge before closure pours, the completed bridge, and the completed bridge cross section. The individual deck segments, which are approximately 8-feet long, 26-feet wide and

[5] It may only be possible to erect temporary barriers the first day. If so, the small C.I.P. pour for the final barriers may have to be delayed until the following day.

8-inches deep,[6] are connected to each other and to the longitudinal I-beams with grouted pockets.[7] The barrier may be attached to each segment prior to installation or added later. Also, the barrier may be either precast with a small C.I.P. closure pour as shown in Figures 6.1 and 6.2 or slip-formed, as is typical. In addition, barriers with openings as well as solid barriers can be cast in the prefabricating plant. The maximum weight of an individual concrete deck segment is less than 21 kips, a load that a 22-ton crane can handle at a 9-foot reach. The I-beams are to be installed on the abutments and then the deck panels are to be mounted on the I-beams, working from the center of the span to both ends whenever possible.

Figure 6.4 illustrates the top of the I-beam with countersunk shear keys and embedded multi-directional leveling and shear screw assemblies. These assemblies are cast into the I-beam without the screws attached. After the beam is cast, a plastic top plate is removed from the assembly and the screws are attached either before panels are placed (as shown) or through the panel shear pockets after panel placement.

If prestressed concrete I-beams are used, they will weigh approximately 23 kips for the 50-foot clear span and 48 kips for the 90-foot span. For the 50-foot span the beams can be installed with one 30-ton crane in the streambed (or with two cranes on the abutments), but for the 90-foot span a special erection beam launching system is proposed for the I-beam installation.

As mentioned above, either concrete or steel I-beams are envisioned for this concept, although concrete I-beams are shown in the figures. Concrete U-beams could also be used except that they would be too heavy for the small crane(s) expected to be used and the aesthetic advantages of U-beams are not thought to be needed for typical off-system bridges. A somewhat shallower deck can possibly be utilized with the lateral prestressing to be provided. Exploration of this latter possibility is recommended for future research.

For the current concept, it is anticipated that the prestressed panels will be cast with embedded welded wire fabric. Transverse prestressing and possibly longitudinal post-tensioning will be performed. At two locations per supporting beam (see Figure 6.1), shear pockets will be located in each panel. Within each shear pocket at least two shear and leveling screws will be located as shown in Figure 6.5. After the panels are placed, adjusted, and positioned properly (e.g., for durability and smooth ride quality), they will be grouted to the shear and leveling screws and to the shear pockets. Thus, composite action between the panel and the beam will be achieved within the shear pockets and shear keys.

---

[6] Though not felt to be practical now, another possibility that could be investigated in the future is a full-depth FRP deck panel. Only a concrete deck panel is considered for this project. Also, the 8-foot longitudinal dimension may be economically extended to 10 feet.

[7] Alternatively, bolted connections may be possible, thus saving even more construction time.

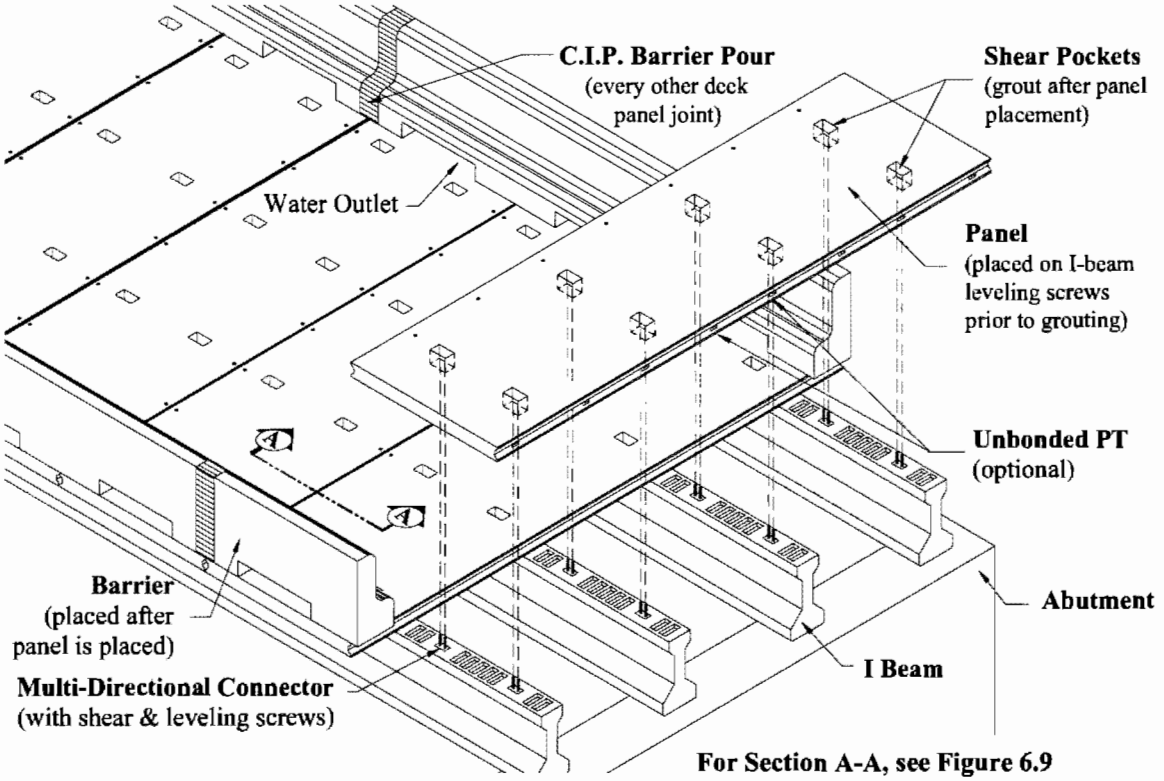

Figure 6.1 Conceptual Full-Width Precast Panel Deck (Before Closure Pours)

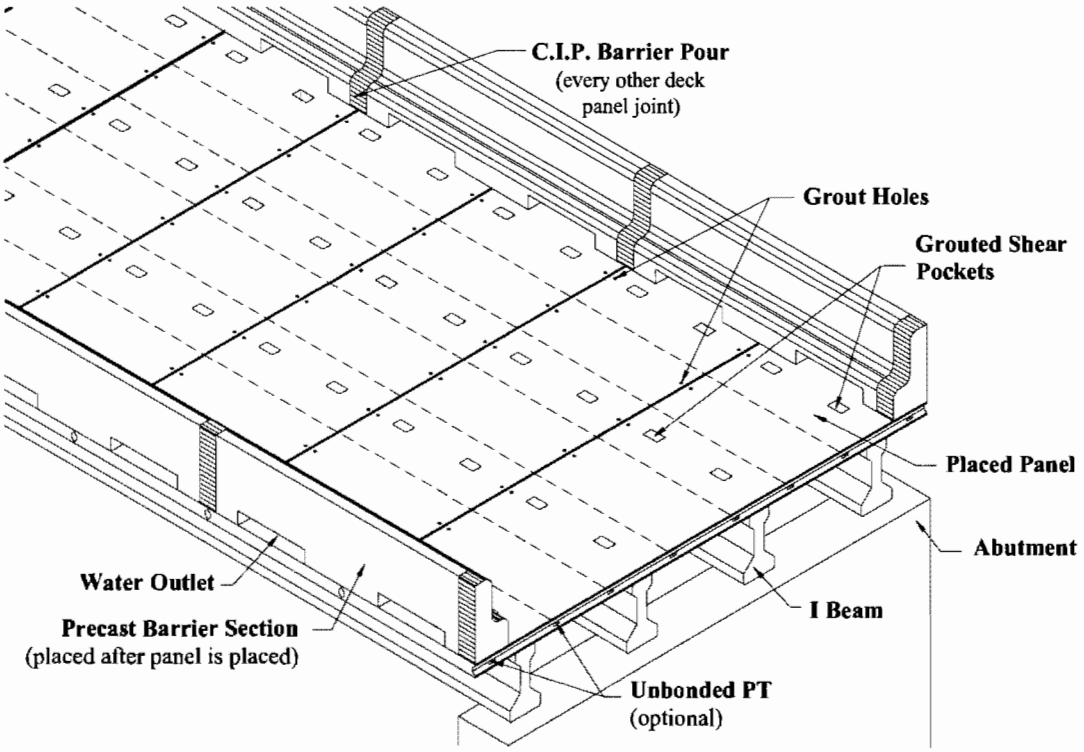

Figure 6.2 Conceptual Full-Width Precast Panel Deck (Completed)

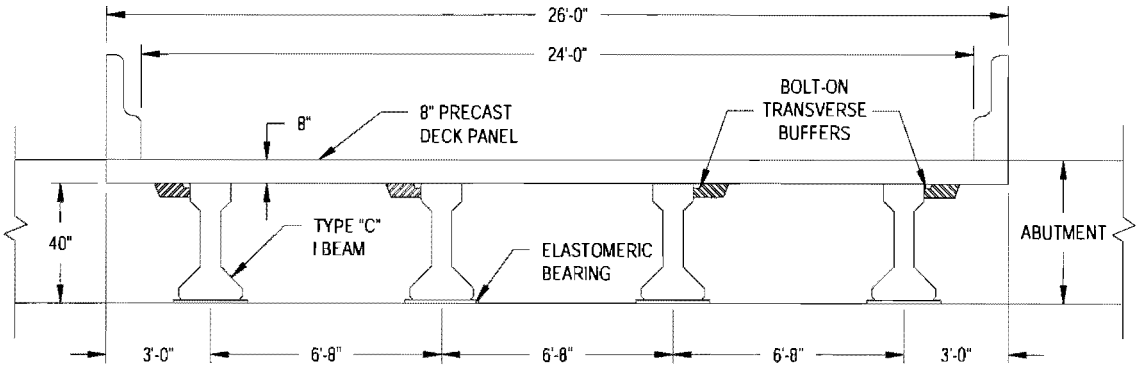

Figure 6.3 Completed Bridge Cross Section

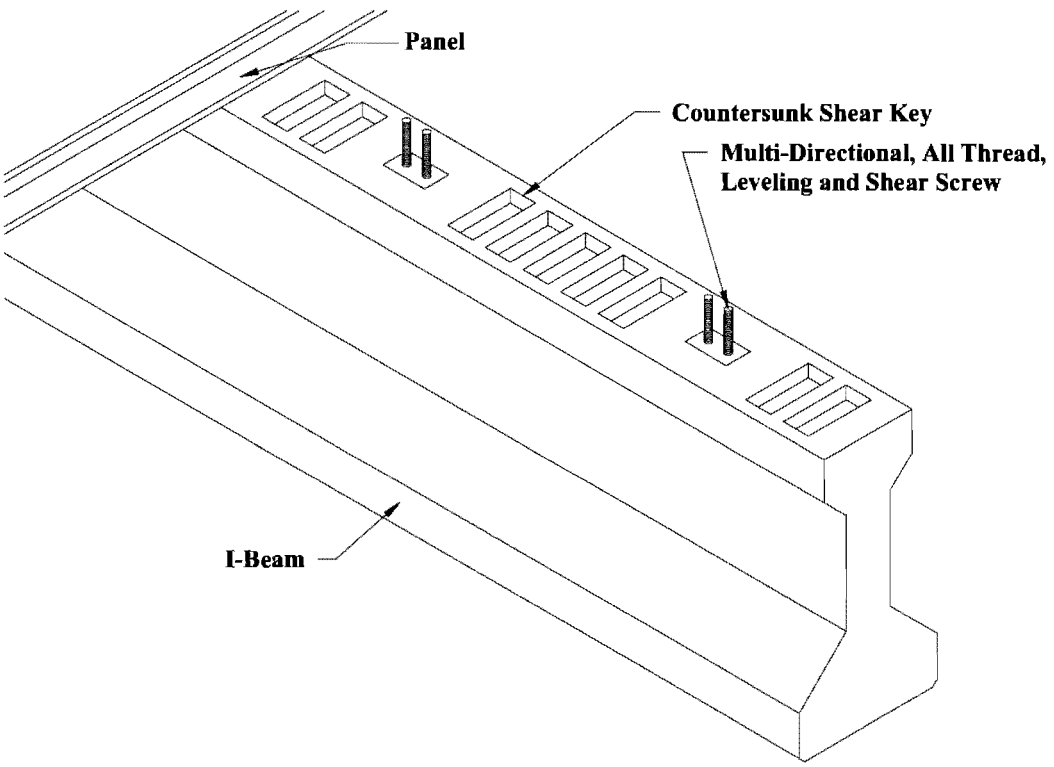

Figure 6.4 The Prestressed Concrete I-Beam

Figure 6.5 shows a portion of a panel over an I-beam in plan and section views. The multi-directional assemblies are embedded in the I-beam and anchored with longitudinal and transverse rebar. Similarly, both longitudinal and transverse rebar pass through the panel shear pockets. The leveling plates bear against this exposed shear pocket reinforcement as adjustments are being made. Once all panels are leveled, they can be post-tensioned longitudinally. The leveling plate provides a hold-down force, though the screws are able to

translate horizontally. Post-tensioning can be performed with unbonded sealed monostrand if desired. (See Appendix B) For maximum durability, longitudinal post-tensioning is recommended. After post-tensioning (or after leveling if post-tensioning is not performed) the panels can be grouted to the beams.

Figure 6.6 shows a detail of the grouted panel and beam shear keys. An innovative concept shown consists of flexible strips glued to the beam prior to beam placement. These strips will fit into longitudinal grooves on the underside of the panel as shown. The strips will be flexible enough to allow leveling of the beam, yet stiff enough to allow grouting of the shear keys and pockets, thus ensuring top-only construction.

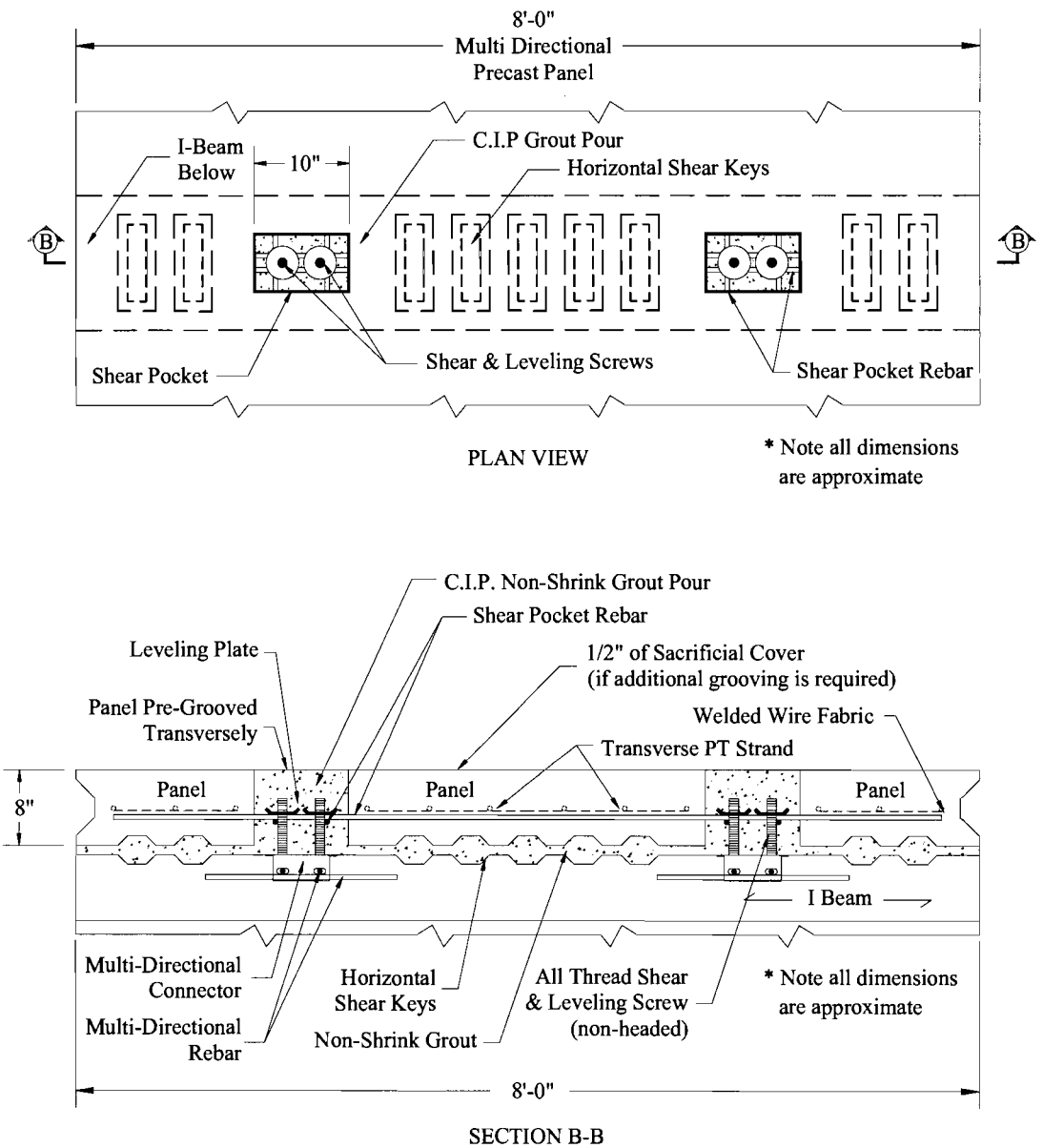

Figure 6.5 Conceptual Shear Pocket with Shear and Leveling Screws

Figure 6.7 shows the same detail only for a shear pocket. As shown, the multi-directional connector is embedded and secured to the beam with both longitudinal and transverse reinforcement. Similarly, both longitudinal and transverse rebar (exposed before grouting) continue through the shear pocket. The leveling plate shown is conceptual at this time. Development and testing of more refined details for the leveling plate, the screws, and the flexible strip should be continued.

Figure 6.8 shows the underside of one 26-foot-wide by 8-foot-long precast panel. The shear keys and pockets match those on the four supporting beams. The top of each beam is shown in Figure 6.4.

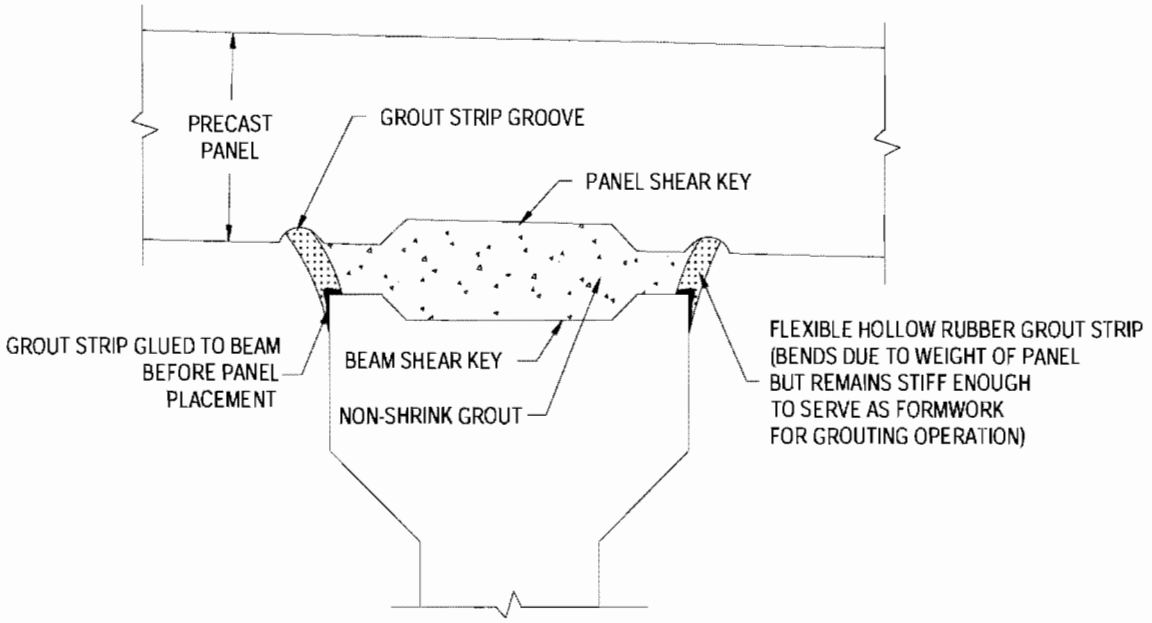

Figure 6.6 The Grouted Panel and Beam Shear Keys

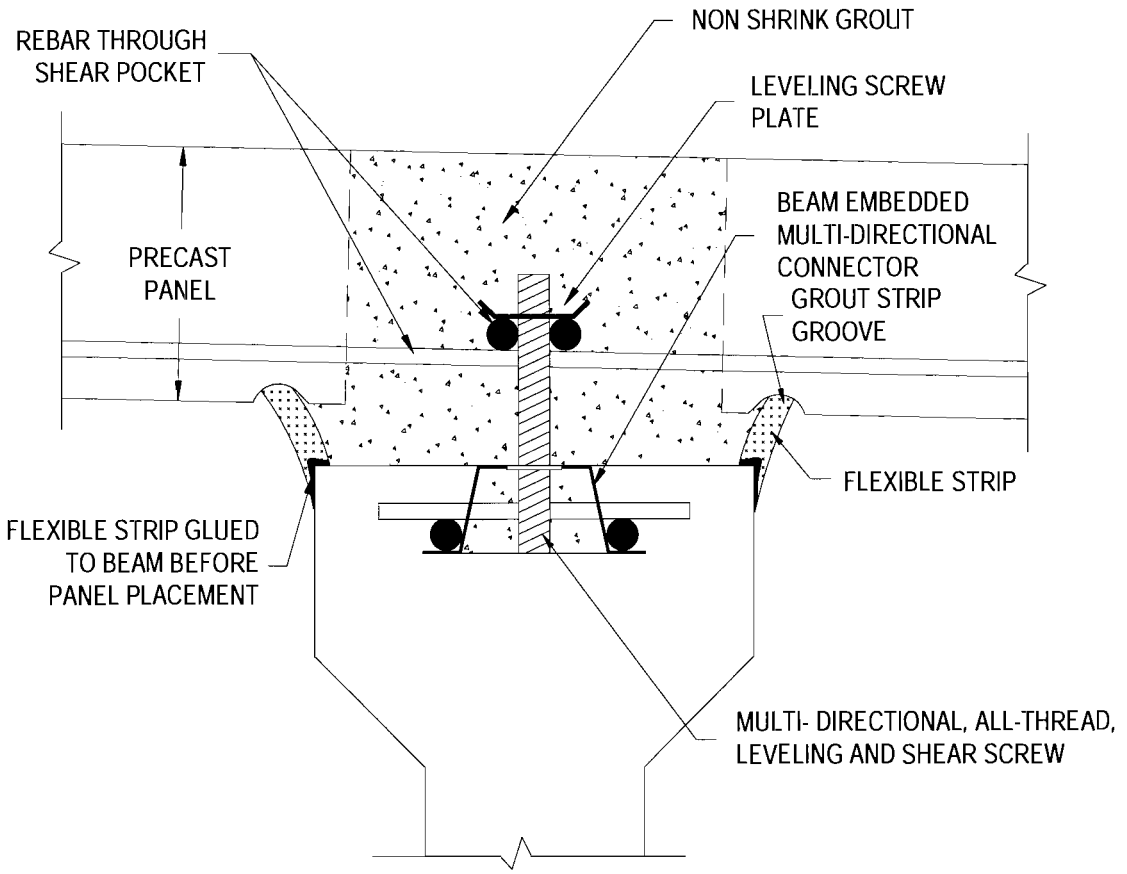

Figure 6.7 Details of Shear Pockets

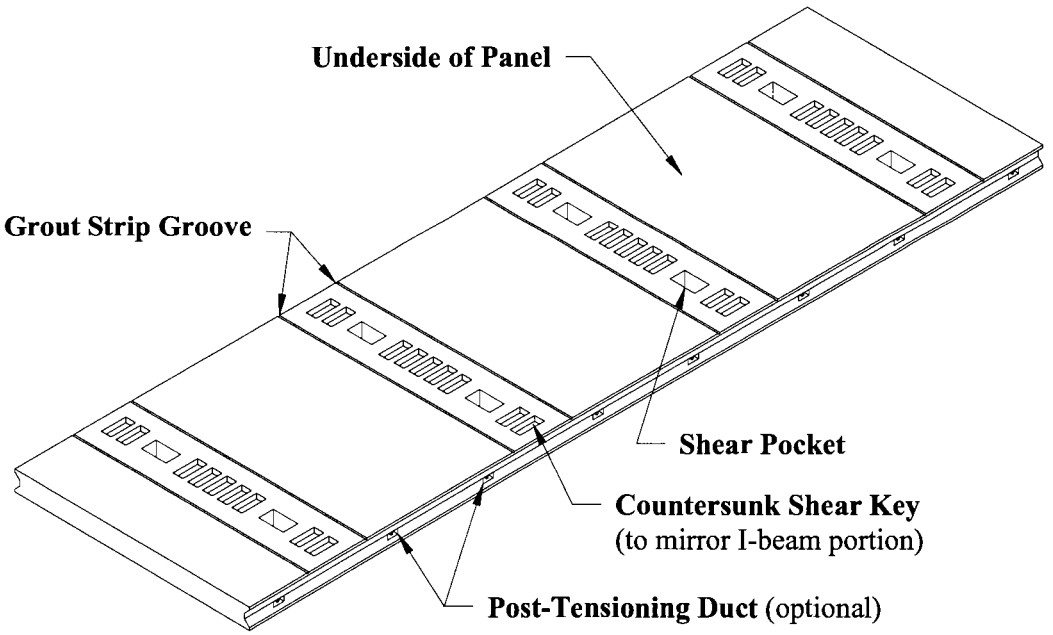

Figure 6.8 The Underside of the Precast Concrete Panel

Finally, a transverse shear key between the panels is shown a cross-section in Figure 6.9. Small grout holes are shown so that the entire procedure can be completed from the top deck only.

The full-depth, full-width panels themselves could either be independent of one another, where ride quality is not a primary concern, or could be attached to each other through the use of post-tensioning. It is expected that the proper use of shear pockets, shear keys, and leveling screws will be sufficient to achieve acceptable ride quality for most off-system bridges. However, should additional adjustment, in the form of grooving, be needed, a ½'' sacrificial cover is included in the full-depth panel as shown in Figure 6.5. Also, though not shown in the figure, an asphaltic overlay can be added after for improved ride quality. Since ride quality for off-system bridges typically is not a critical concern, the bridge can be opened without even in the winter months. Later, when converse and when weather permits the overlay can be added if desired.

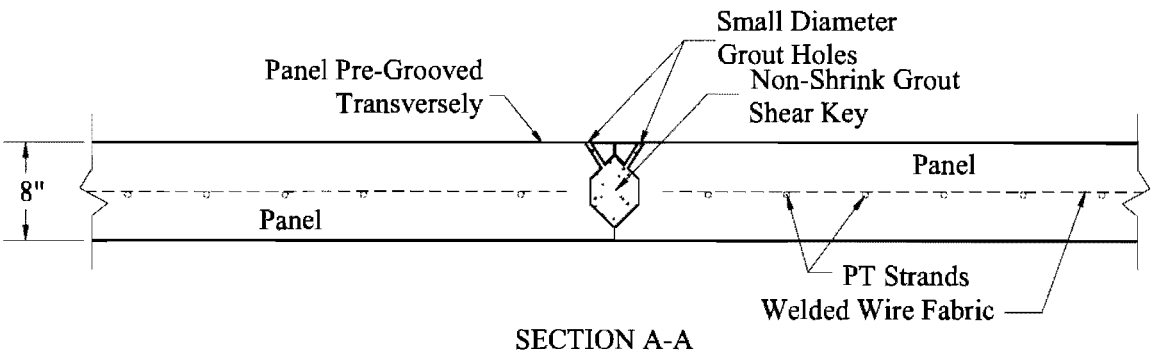

Section A-A taken from Figure 6.1

Figure 6.9 Transverse Shear Key between Panels

It is understood that panels typically are flat on the bottom, whereas the supporting beams are cambered upward before the panels are placed. The beams will become relatively flat once all of the dead load is placed. Thus, there likely is a need for some type of grout bed. Future research into eliminating this grout bed is justified.

Another possibility is the use of "bolted-down" connections instead of the shear pockets shown. Though not shown in the figures, bolts (or flush bolt couplers) could be embedded into the undersides of the panels. This system could eliminate the C.I.P. shear pocket/key pour. The bolts would be fastened to the steel or concrete I-beam below, thus creating a hold-down force. In addition, the bolts could be used for fine adjustments. Further investigation into this bolt-down connection detail is recommended.

In summary, numerous details, including casting, placement, and required adjustments of the proposed full-width, full-depth panels, have been mentioned in the preceding discussion. Engineering and analysis of these details must be addressed before implementation. When one realizes that upon completion of such details that at least one full calendar month of bridge construction time can be eliminated potentially from every

off-system project, it is apparent that the efforts required for the analysis and completion of such details are justified.

The following subsections discuss further the "PCP_{ffwd}", or the full-width, full-depth deck panel concept and its application to the specific 50-feet and 90-feet prototype cases. The "*Shallow Channel*" concept is addressed later in this chapter.

6.2.1 Precast Panels

As has been discussed and illustrated, the bridge deck in this concept consists of full-depth, full-width precast panels. The panel transverse width is 26 feet and its longitudinal length with respect to the bridge span is 8 feet. The length of the panel has been selected to minimize weight; however, further research is required to determine an optimum panel length. Also, the slab thickness is initially taken as 8 inches. It is possible that this thickness can be reduced with appropriate prestessing and/or the use of high-performance concrete. Such a thickness reduction will reduce the dead weight of the panels, thus making placement and shipment of the panels easier. A more detailed analysis must be performed to determine the effects of decreasing the slab thickness.

The precast panels thus far have been assumed to have a rectangular cross-sectional shape. However, research has been performed on precast panels with a modified cross-sectional shape. Research performed by Takashi Yamane, et. al. (1998), used a precast panel with a cross section consisting of an 8.1-inch-thick solid section at each girder location and a 4.5-inch-thick section midway between the girders. Using this multi-stemmed section, the self weight of the precast panels was reduced as well as the amount of longitudinal post tensioning required. The modified shape of the section perpendicular to traffic used by Yamane (1998) also reduced the amount of reinforcement needed in the negative moment zones by providing a large compression area at the bottom (Yamane et al, 1998). Further research should be pursued to determine the advantages and disadvantages of using such a modified precast panel.

6.2.2 Panel/Beam Composite Action

One critical issue in order for the full-depth precast panels to be effective is achievement of composite action between the beams and the panels. One option is to provide shear pocket connections between the precast panels and their supporting beams as discussed and shown in previous figures. The shear connectors accomplish two goals. First, they provide a system for transferring the horizontal shear between the girders and the bridge deck. Second, they provide a vertical hold-down force between the bridge deck and the girders (Yamane et al, 1998). For the concrete I-beams, it is necessary to embed the connector assembly at the time of casting of the beams or to embed steel plates during casting, to which shear screws can be welded in the field. For the steel I-beams, the shear screws can be installed either in the shop or in the field, but for simple erection purposes, it may be beneficial to install the leveling shear screws in the field. Research has shown that grouted shear pockets with shear studs are an effective solution to achieve composite action (Issa, et. al., 2000). The number and type of screws, as well as the shape of the shear pocket, can be better determined after a rigorous analysis is performed.

6.2.3 Panel/Panel Transverse Joints

Research has shown that bridges with post-tensioning often provide tighter, more secure joints (Issa et al, 2000). Research is required to determine what amount of post-tensioning force (if any) is required in the longitudinal direction to provide continuity and to secure the tightness of the transverse joints. However, further research is required to determine what options are available to eliminate post-tensioning. One option is to provide shear keys between the adjacent panels. Then, after the panels are in place, a coupler can be attached to the bars, clamping the panels together. If the coupler can provide enough force for the joint to be tight, i.e., prevent ride quality problems and water from leaking through the deck, then the task of post-tensioning can be eliminated. It is also possible that simply by supporting the center of the span during placement of the deck panels with a camber in the supporting beam, and then releasing this support, sufficiently tight transverse joints will be accomplished. Though these examples are conceptual, further research to determine their feasibility is recommended. A full-scale mock test is suggested.

Although methods to avoid post-tensioning may suffice, unbonded, sealed longitudinal post-tensioning is suggested. By eliminating the grouting of the tendons, the application of post-tensioning is fairly straightforward. The single monostrand tendon envisioned requires no grouting and only a small, e.g., 35-lb, jacking force (see Appendix B).

6.2.4 Ride Quality

When using full-depth precast deck panels the ride quality of the bridge can be a serviceability issue. Vertical misalignments along the transverse joints between adjacent deck panels can cause poor ride quality. Due to the remote locations of many off-system bridges, it is unknown if ride quality should even be considered. Many of the approaching roadways are dirt or gravel roads that already have poor ride quality, (See Appendix A) so spending additional money on ride quality corrections for a new off-system bridge is questionable. However, if the ride quality is a problem, several solutions exist. First, quality control measures can be implemented during casting of the precast deck panels to minimize vertical misalignments. Second, the use of shims and grout-filled closure pours can be utilized to control vertical misalignments and allow adjacent deck panels to interlock, therefore reducing overall panel misalignments. Third, grooves can be cut into the panels after placement, thus helping to smooth any misalignments between adjacent panels. Fourth, a non-structural overlay (e.g., asphaltic, concrete overlay, or seal coat) may be installed on top of the precast panels to compensate for small misalignments.

6.2.5 Construction of the 50-foot Prototype Case

The first prototype case is a single-span bridge with a clear span of 50-feet and channel access allowed. In this case, the superstructure construction sequence is fairly straightforward. A small, 30-ton crane can handle each precast component in turn: individual 23-kip Type B I-beams (if concrete is chosen) and individual 21-kip (maximum) concrete deck segments. The center-to-center spacing between the four beams is anticipated to be 6-foot 8-inch, as shown in Figure 6.3. The deck panels will all be identical except for the two end ones, which will have a thickened edge. The panels will be set on the I-beams working from the center to the ends, and a temporary support will be provided in the center to maintain an upward camber in the beams until the construction is complete. Further

examination of the requirements and best approaches to designing the shear connection, is recommended.

Stage I of the construction process for the 50-foot case is illustrated in Figure 6.10, which shows a typical cambered beam prior to application of the deck weight. Figure 6.11 represents Stage II, the start of the installation of the deck panels. One panel is bolted to the beams through the shear pocket. As the leveling and shear screws are able to move both longitudinally and horizontally prior to grouting, the panel is able to move slightly prior to grouting. Stage III is represented by Figure 6.12, where all panels are placed, and the beams are now relatively flat.

Stage IV, shown in Figure 6.13, consists of optional longitudinal post-tensioning. New sealed monostrand post-tensioning would not require grouting.[8] Stage V is the grouting of the shear pockets and keys; this stage is shown in Figure 6.14. Figure 6.15 shows the completed bridge with precast barriers in place.

6.2.6 Construction of the 90-foot Prototype Case

The second prototype case is a single-span bridge of the same width with a clear span of 90-feet and channel access not allowed (i.e., cranes and equipment are NOT allowed in the streambed). Type C prestressed concrete I-beams, each 92-foot long, will be used for the supporting elements (called "structural beams" herein) since they can achieve a 90-foot clear span (TxDOT Bridge Design Manual, 2001). Steel girders may be another option that should be investigated in the future. It is anticipated that the extra weight of concrete U-beams is too great for many off-system bridge sites because of the remote locations and the difficult access for heavy machinery. Once the structural beams are in place, full-depth precast panels will be placed on the beams in a manner similar to the case of the 50-foot span. However, for the 90-foot span with the limited crane capacity available at the site, the panels may have to be placed starting at each end of the bridge.[9] Once again, the only cast-in-place concrete that will be required will consist of grouted shear pockets and keys to establish composite action.[10]

[8] See Appendix B.
[9] Whereas in the 50- foot case, the panels will be set in the middle first, and then towards each end.
[10] If "bolted-down" panels are used, only small shear pocket C.I.P. pours will be required.

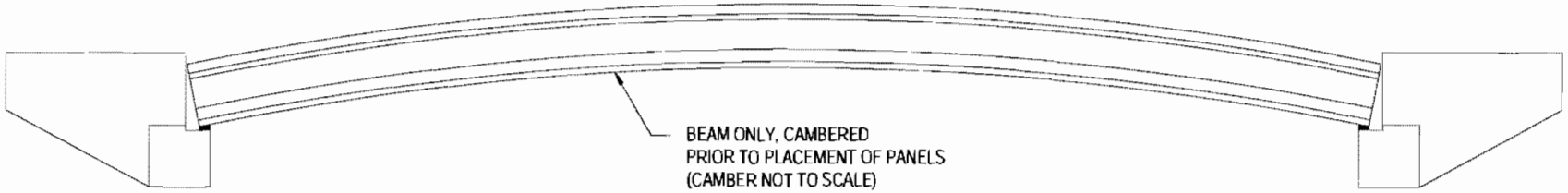

Figure 6.10 Stage I: Cambered Beam Before Panel Placement

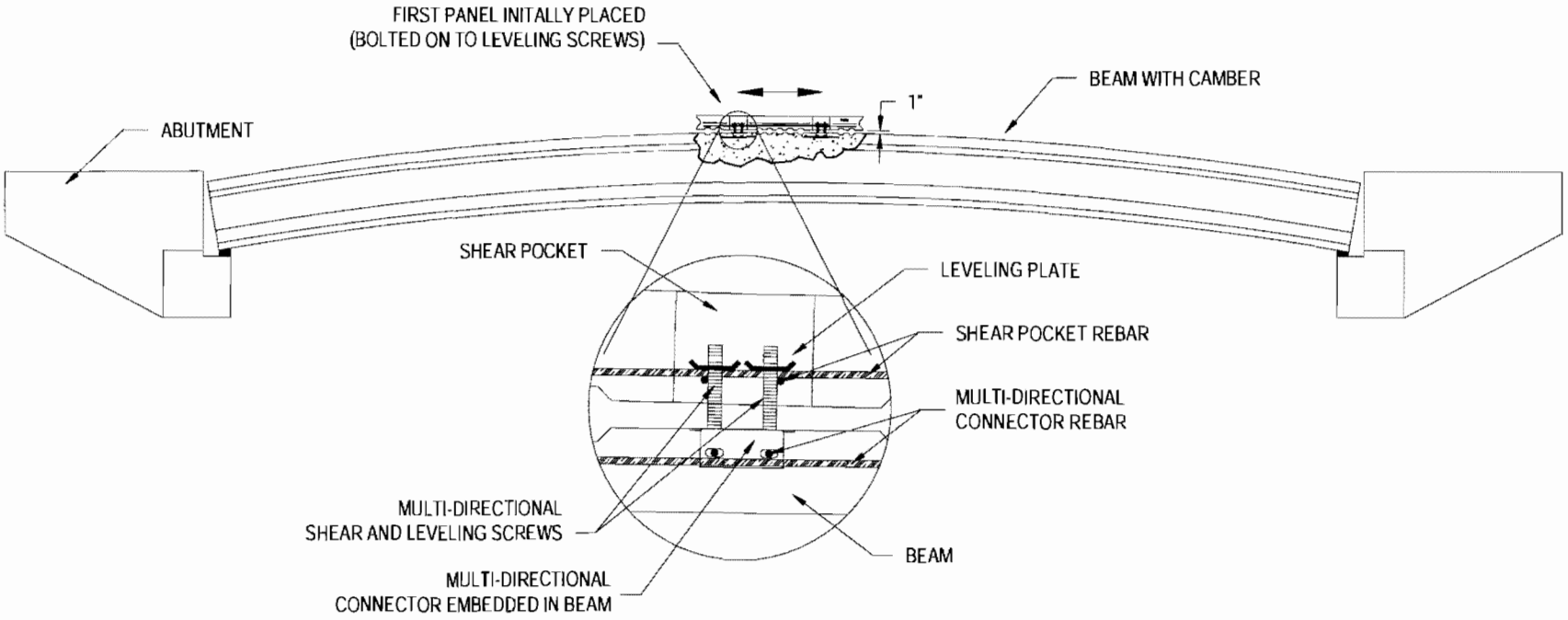

Figure 6.11 Stage II: Beam with First Panel Placed

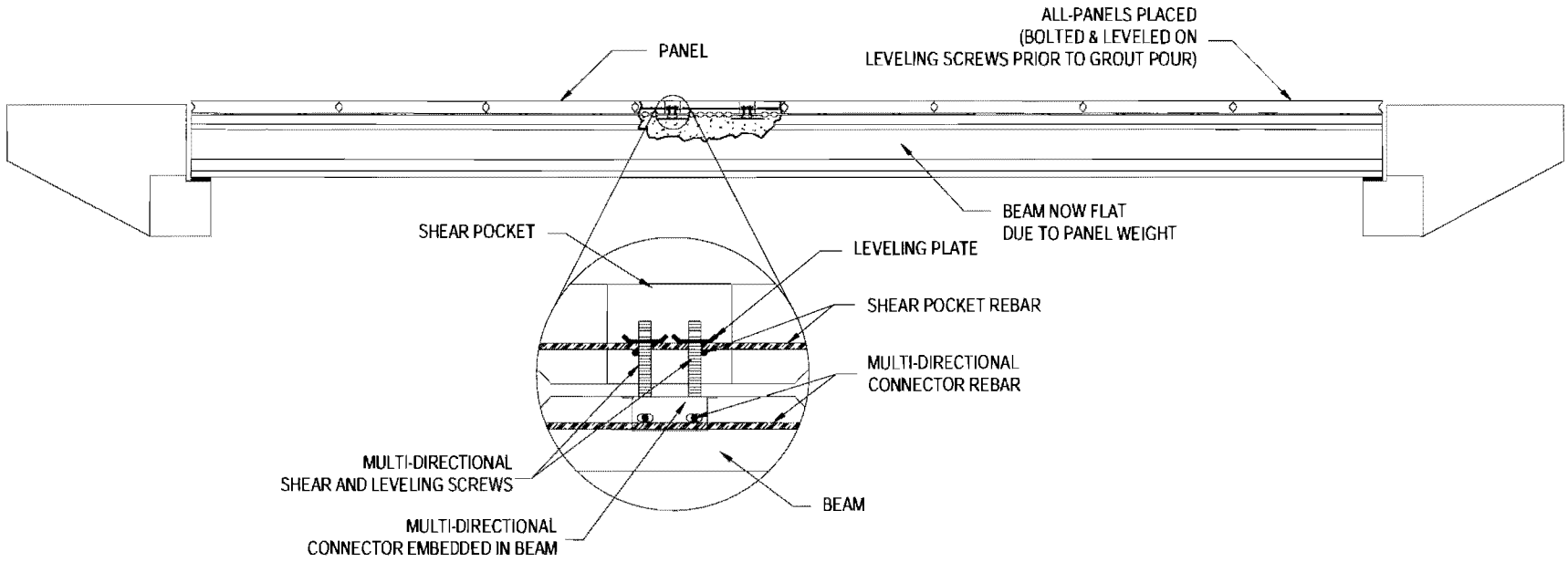

Figure 6.12 Stage III: Beam with all Panels Placed and Leveled

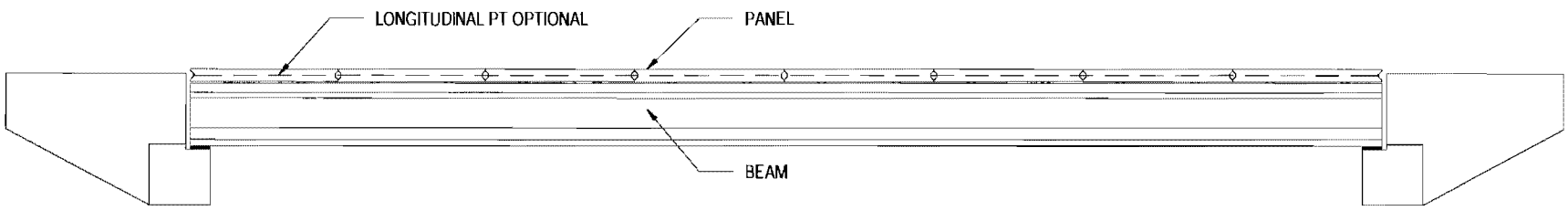

Figure 6.13 Stage IV: Deck slab with (Optional) Longitudinal Post-Tensioning

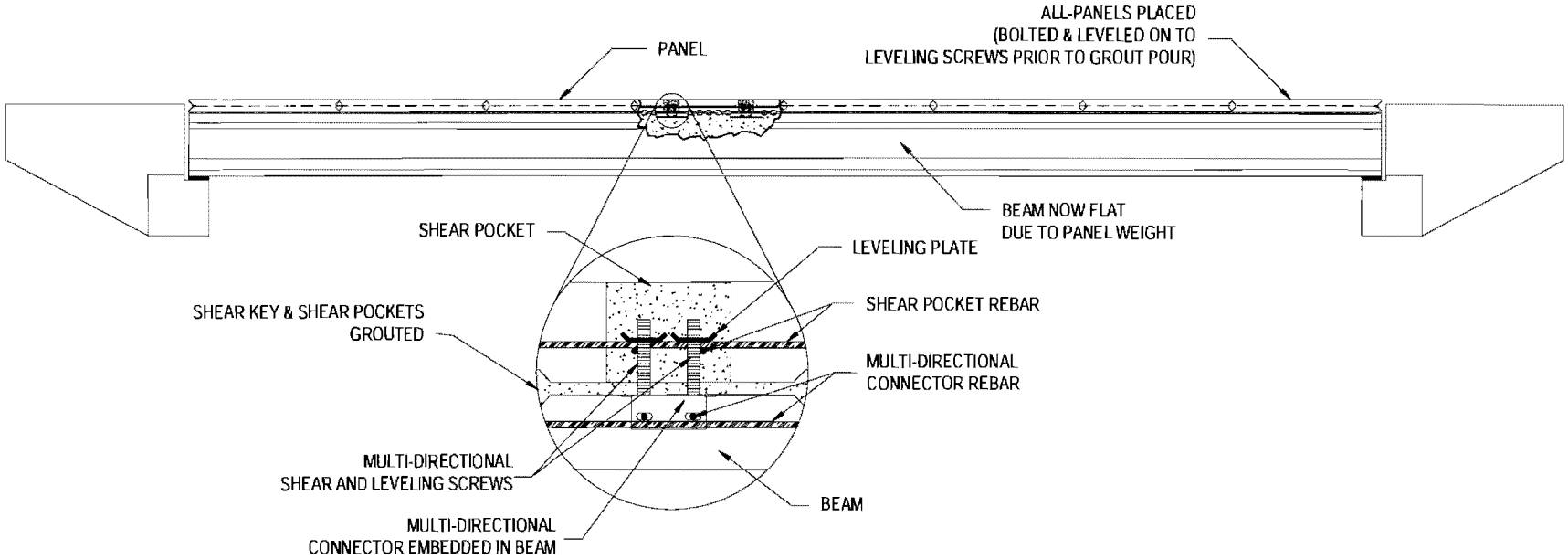

Figure 6.14 Stage V: Beam with Panels Grouted

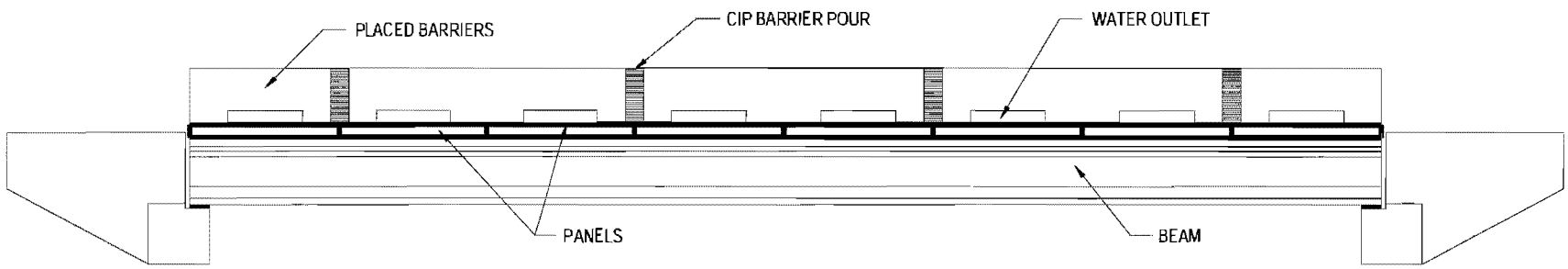

Figure 6.15 The Completed Bridge

For the 90-foot clear span without access to the streambed, the erection of the structural beams must take place from the abutments, which presents a special challenge, especially with the limitation of using relatively small cranes. As indicated earlier, it is assumed that a crane can be positioned near each abutment. Figure 6.16 illustrates the construction site for this prototype case. Unless the bridge can be constructed with very heavy lifting equipment, an innovative erection system must be developed to accomplish the placement of the superstructure components. Due to the assumed financial constraints, rural location, and limited work space often associated with off-system bridges, a conceptual erection system has been developed by TTU researchers to construct the bridge.

6.2.7 Special Erection System for 90-foot Case

The complete proposed erection sequences are discussed briefly first. A more detailed explanation with figures then follows.

The erection system will function as follows. First, two "erection beams" will be designed to carry the weight of one Type C I-beam, called a "structural beam." Then at the site, using two small cranes, the erection beams will be placed onto the two abutments. When the two erection beams are in place and braced together by diaphragms, each structural beam will be set on rollers at one abutment and in line with the bridge and will be pulled across the erection beams, e.g., with a winch from the crane at the other abutment. They could also be pushed by a truck employing a special mechanism. After each structural beam is pulled across the span, the two cranes will pick it up and set it into its final position on the abutments. When all four beams are in place, the erection beams will be removed. Next, the precast panels will be lifted into place, and the shear pockets and keys will be grouted.

One major concern when developing the erection system presented was to create a system that would allow two small cranes (one at each end) to erect the entire bridge. Before the erection system was designed, several cranes were investigated to determine their lifting capacities as well as their estimated prices. The cranes investigated were from Link-Belt Construction Equipment Company. After consulting with representatives from Link-Belt, three cranes were selected. The crane choices were narrowed by taking into consideration their lifting capacities and their prices. The first crane was a Link-Belt RTC 8030 II. This crane has a lifting capacity of 19,000 lbs at a 30-foot radius and costs approximately $170,000. The second crane was a Link-Belt LS 138 H II (Link Belt 2002). This crane has a lifting capacity of 25,000 lbs at a 50-foot radius and costs approximately $600,000. The third crane was a Link-Belt LS 238 H. This crane has a lifting capacity of 53,000 lbs at a 50-foot radius and costs approximately $800,000. It is assumed that any bidding general contractor will already own the equivalent of the 22-ton crane. It is also assumed that the second crane (i.e., the 30-ton crane) will have to be purchased or leased by the contractor for a particular "off-system" application.

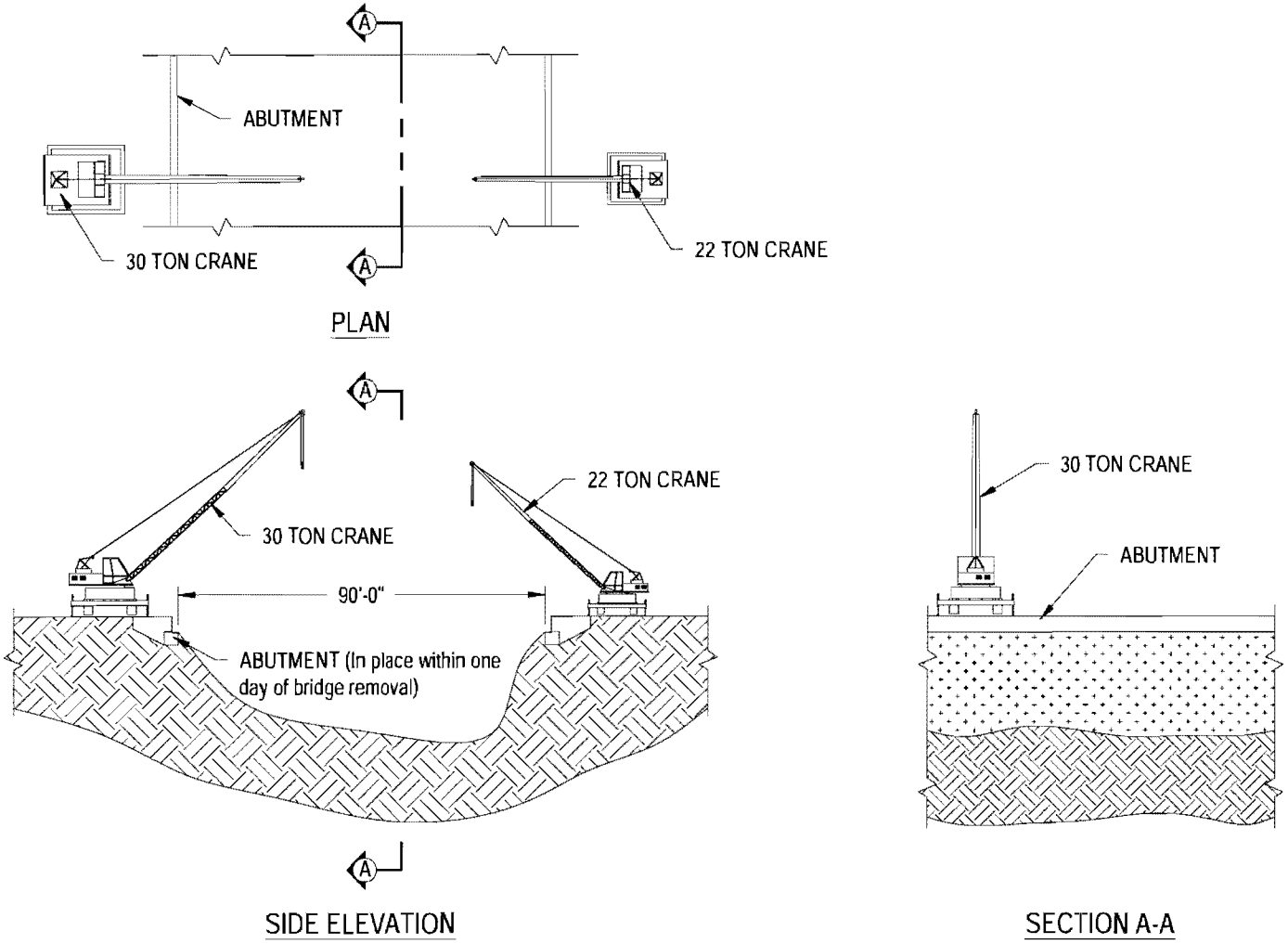

Figure 6.16 90-foot Clear Span Bridge Site

Also, though the 22-ton crane is the minimum required, the contractor may decide to use two 30-ton cranes, as this larger size currently seems to be more popular, and therefore not too expensive.

A 92-foot Type C I-beam weighs approximately 47,500 lbs. The only crane of the three considered that can place the I-beam directly from the abutment is the Link-Belt LS 238 H (approx. $800,000 purchase price). However, because this is a very large, costly crane, and because most off-system bridges have a limited budget and limited room for such heavy equipment, a solution to place the concrete I-beams with a smaller crane was deemed necessary by the TTU researchers.

It was then decided that two relatively light beams would be used as erection beams to place the Type C I-beams with the help of a 30-ton Link-Belt RTC 8030 II crane (approx. $170,000 purchase price). As mentioned previously, however, this crane has only a 30-foot radius at its rated load and the clear span of the bridge is 90 feet. Thus, a counterweight will have to be added to each 92-foot erection beam in order for the crane to safely set it. Also, the total weight of the erection beam and the counterweight must not exceed 19,000 lbs.[11]

The next step was to design the erection beams. Due to the importance of making the erection beams as light as possible, fiber reinforced polymer (FRP) beams were first investigated. Use of FRP for civil infrastructure applications is becoming more prominent. Companies have begun making AASHTO HS-25 bridges with FRP structural components, including beams, decks, and guard rails. After researching possible FRP erection beams, it was decided that, at present, the cost and excessive deflection for one with a 92-foot span were too large. However, it is believed that future research should be conducted to determine if FRP erection beams can be produced at a reasonable price for such a long, or even longer, span while maintaining adequate strength and deflection requirements.

It was then decided that two rolled steel beams would be used as erection beams. To determine the required size of the steel beams, it was first necessary to determine the load that would be placed on the beams. It was assumed that each erection beam would carry a concentrated load equal to one-fourth the weight of the Type C I-beam (11,868 lbs.).

When designing the erection beams, two factors were clearly dominant. The first factor was a deflection constraint, and the second was a possible failure in lateral-torsional buckling. These factors controlled the overall design of the erection beams due to the large span length of the bridge (i.e., 90 feet). It was decided that the deflection of the erection beams should be limited to four inches or L/270. The failure mode of lateral torsional buckling was restricted by a plan to provide lateral bracing (a cross-braced diaphragm) at the ends of the beam and every 15 feet-4 inches in between. Figure 6.17 shows an end view of the erection beams and their bracing. The cross bracing will be attached to the erection beams after they have been placed by the crane. Several beams were designed to meet these standards and then checked to determine if the total weight (erection beam plus counterweight) would be under the maximum crane capacity at a 30-foot reach of 19,000 lbs.

[11] There are other methods capable of setting such erection beams. The one presented here should be the least costly option.

A W30x108 steel section was selected for the erection beams, having a weight of 9,936 lbs. The needed counterweight to balance the beam will be 6,360 lbs., giving a total weight of 16,260 lbs. It should be noted that the moment capacity of this beam greatly exceeds the moment produced by the loads since the deflection controls the design. Because of this, the distance between lateral bracing points potentially can be extended, thus simplifying the labor needed to install the supports.

After the abutments are constructed, the erection beams will be set in place. As shown in Figure 6.18, the erection beams will be placed onto temporary supports, which will be placed on the abutments. The temporary supports will be needed to make the tops of the erection beams flush with the ground surface. This will be done to allow the structural beams to be rolled directly from the ground surface onto and across the erection beams. Figures 6.18, 6.19, and 6.20, respectively, show the bridge site with the crane and erection beams ready to be placed, the erection beams being placed with the location of the counterweight specified, and the erection beams in place with the lateral bracing connected.

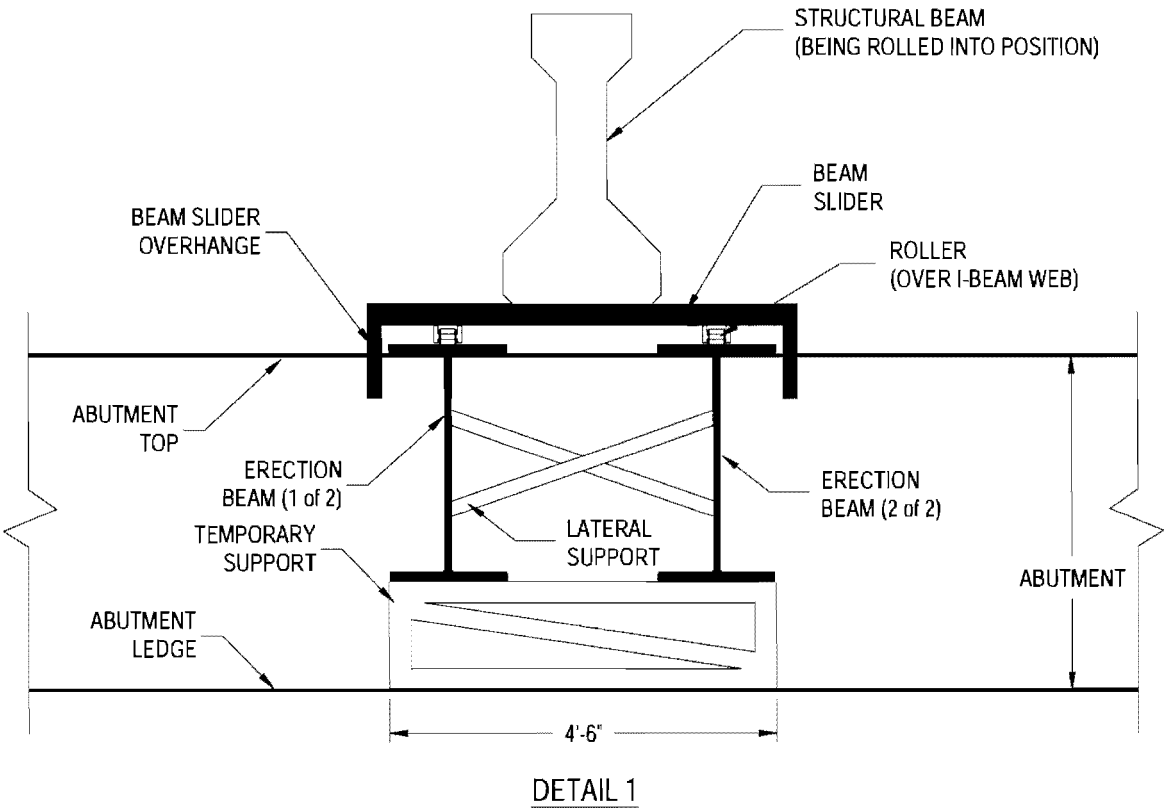

Figure 6.17 Detail of Proposed Erection System

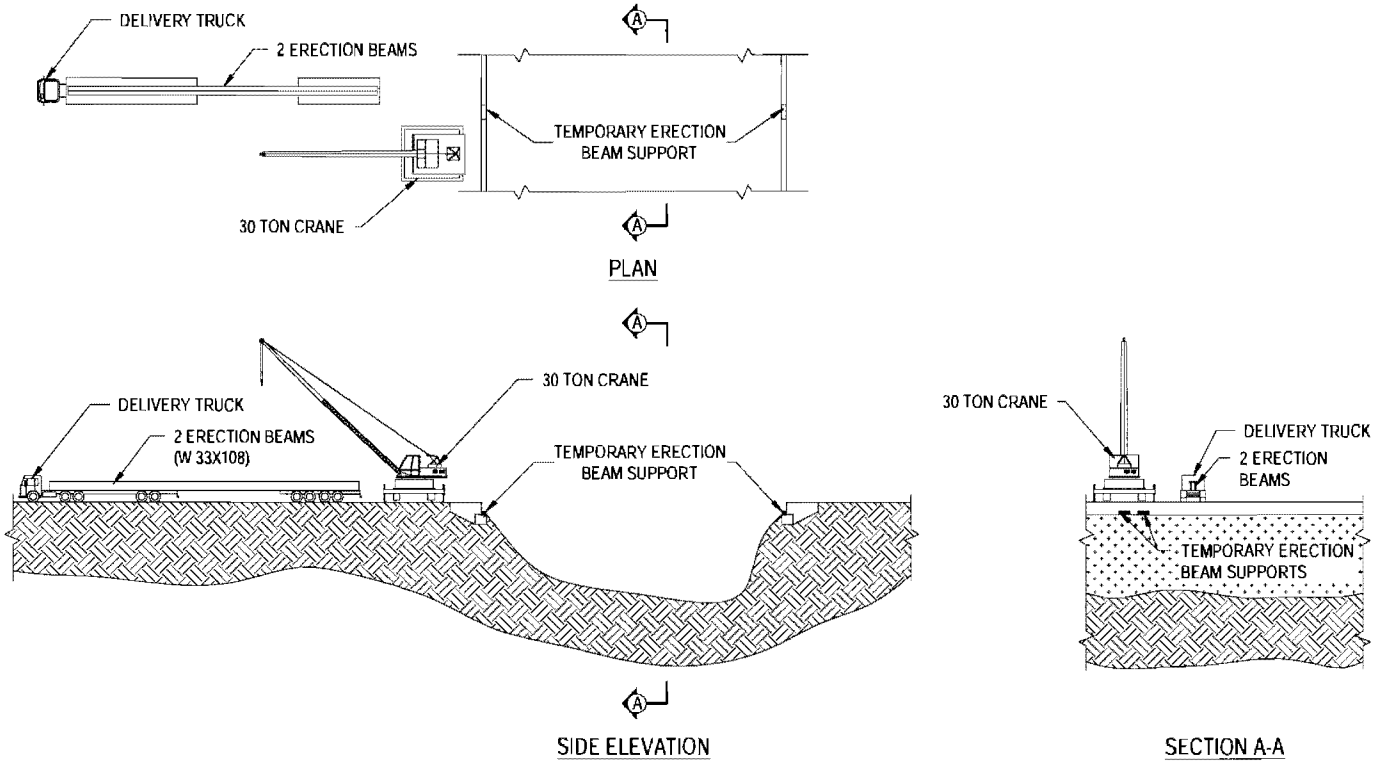

Figure 6.18 Bridge Site with Crane and Erection Beams Ready to be Placed

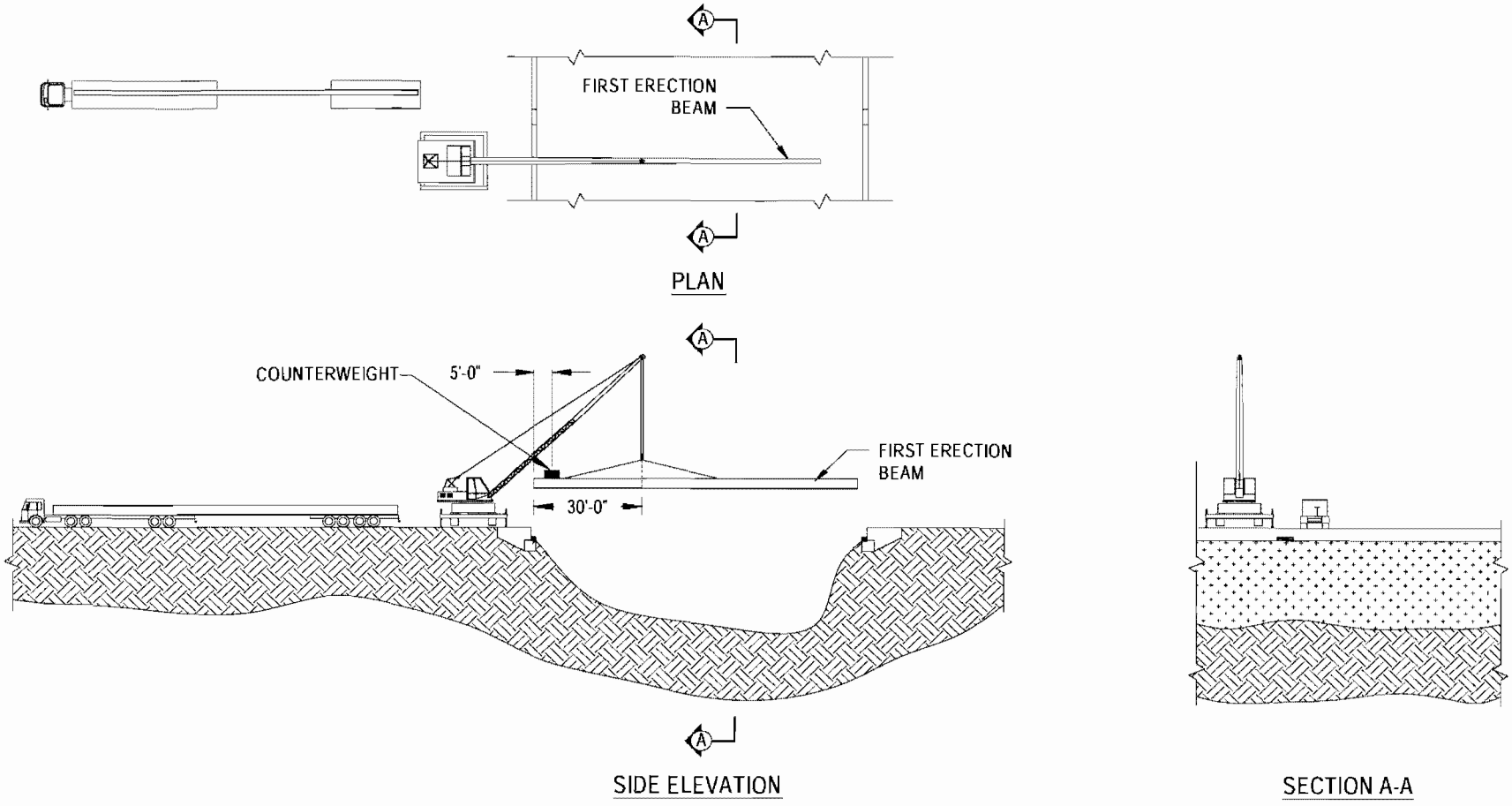

Figure 6.19 Erection Beam Placement

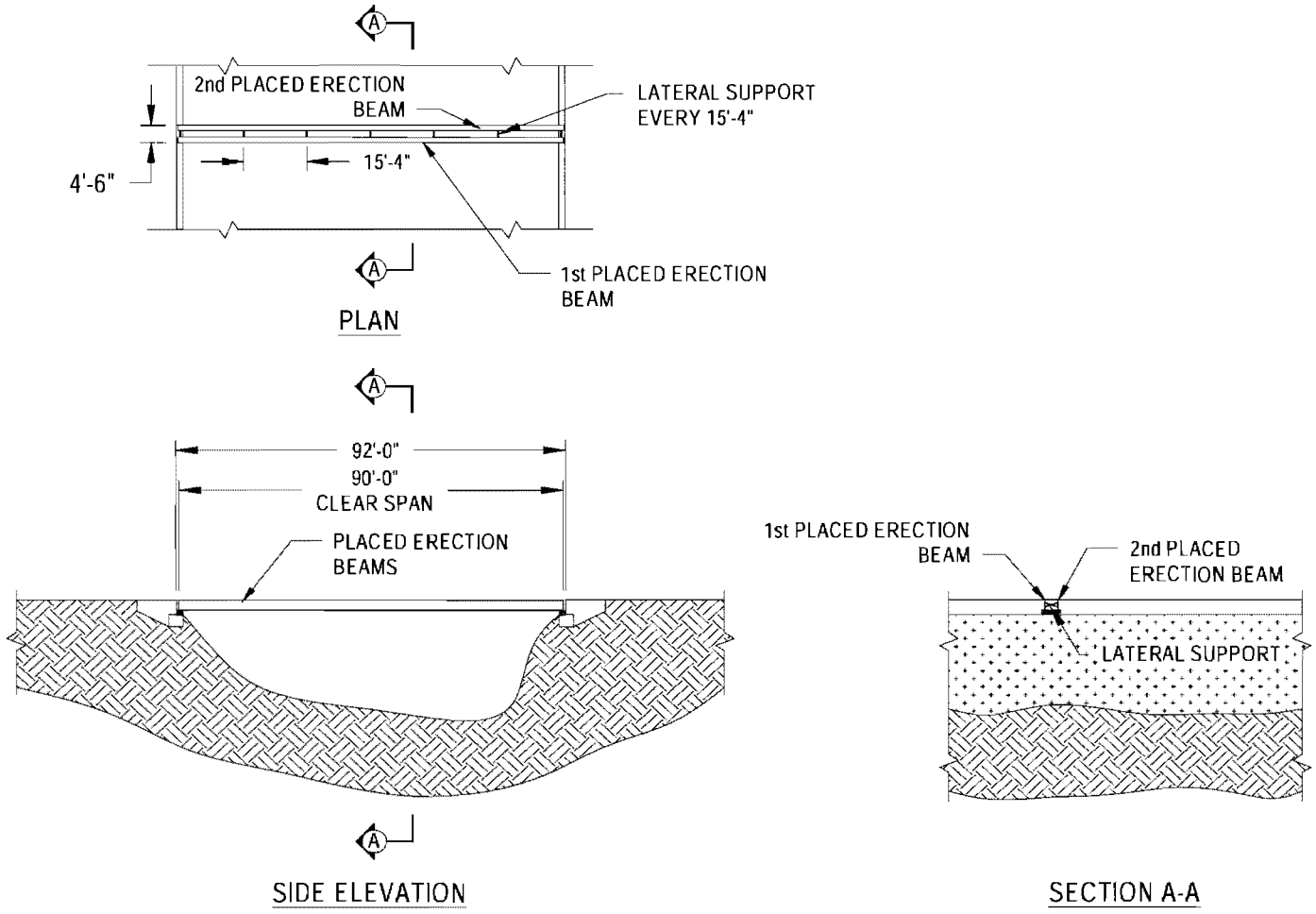

Figure 6.20 Placed Erection Beams

Obviously, it is not known if the sub-grade of the approaching roadway will have sufficient strength to withstand the loads imposed by the structural beam and the crane. A possible solution, should the sub-grade not have sufficient capacity, is to place a steel plate or composite mat system over the ground surface. The steel plate or composite mat system can distribute the weight of the load over an extended area of the roadway, keeping the potentially deficient sub-grade from affecting the movement of the structural beam as it is rolled along. As an example, the Dura-Base Composite Mat System specializes in providing composite mat systems for distributing large loads over inadequate sub-grades (Soloco, 2002).

Rollers, called load skates, will be used under the beams to roll the structural beams across the ground and over the erection beams. Heavy duty load skates, produced by Enerpac, have been investigated to see if they can support the applied load from the structural beam (Enerpac, 2001). Enerpac produces load skates with 1, 10, 15, 30, 60, and 80-ton capacities. The 10-ton load skates will provide more than ample carrying capacity for the structural beam.

Once the erection beams are in place and the lateral bracing has been connected, the Type C I-beams are ready to be placed. Figure 6.21 shows the bridge site with the first delivered structural beam. When the structural beams arrive at the site, they will be lifted from the truck and placed onto a steel plate slider with heavy-duty rollers under the plate. This slider will be positioned on a ground level steel plate or composite mat. This slider will not have the overhang shown in Figure 6.17 for the erection beam sliders, but instead will resemble Section A-A of Figure 6.23. Additionally, a slider will be placed over the erection beams, initially near the abutment as shown in Figure 6.21.

The slider on the ground level and the slider over the erection beams are capable of raising or lowering the beam. Figure 6.22 shows a construction beam being pulled across the erection beams by a winch from the crane at the other end of the bridge. Figure 6.23 shows details of the beam sliders -- both the beam slider over the erection beam and the one over the ground level plate or composite mat system.

Although not presented in detail in this report, it is possible that the structural beams could be launched onto the erection beams directly from the delivery truck, thus eliminating the need for placing the structural beams on the ground. The temporary supports under the erection beams could be built higher so that the tops of the erection beams would be flush with the truck bed or the truck bed could somehow be lowered. The truck could then back up to the erection beams and the crane could pick up each structural beam and temporarily hold it in position. Then the truck could have steel sliders and load skates installed on its bed and the crane could set the beam back down. The same 30-ton crane could perform this operation safely within the small reach required. The winch from the crane at the other abutment could then pull the structural beam across the erection beams as discussed previously.

Once each structural beam is pulled across the erection beams the two cranes (one at each abutment) can pick up the beam and place it in its final position. This process will be repeated for all four Type C I-beams.

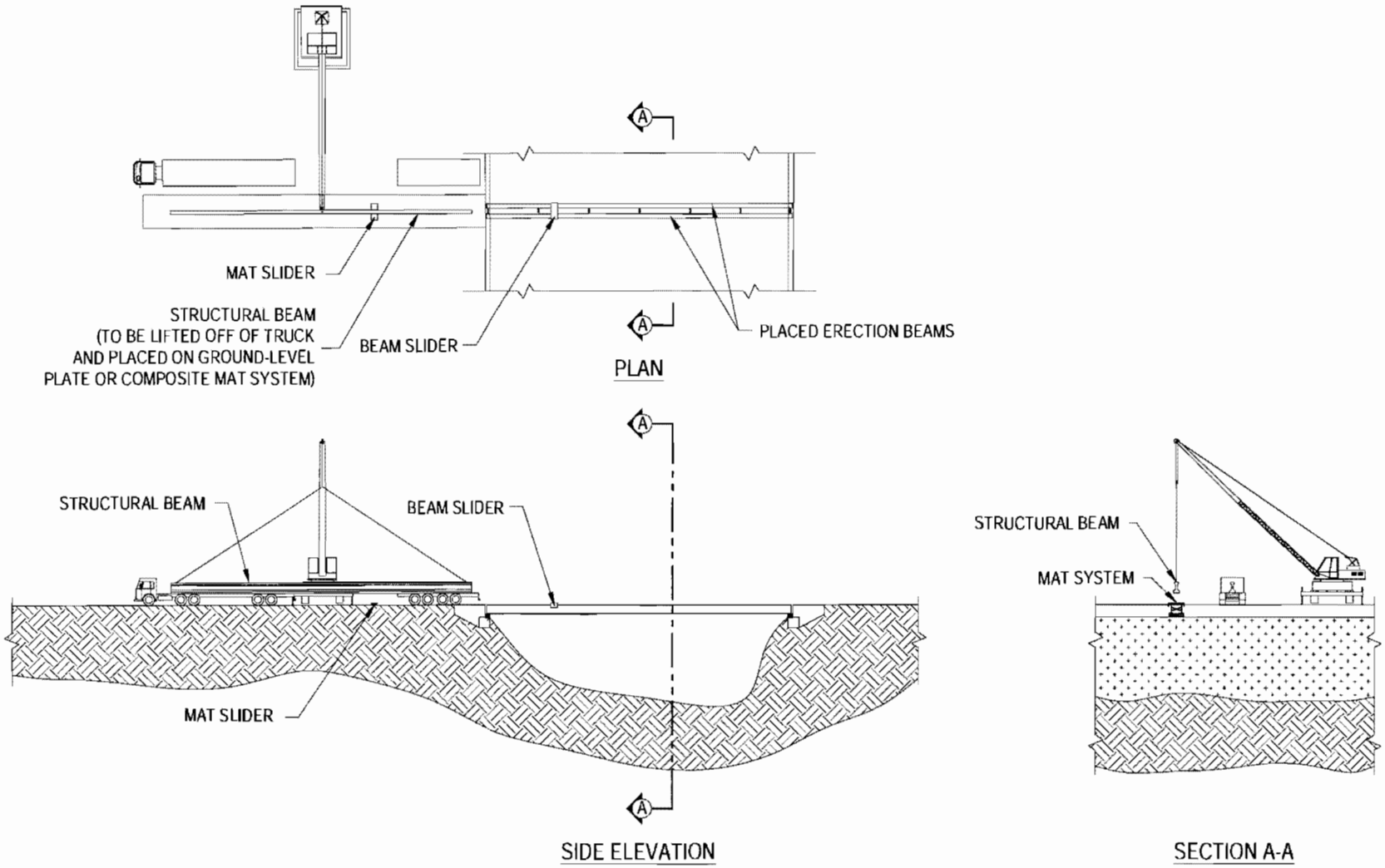

Figure 6.21 Bridge Site with First Structural Beam Delivered

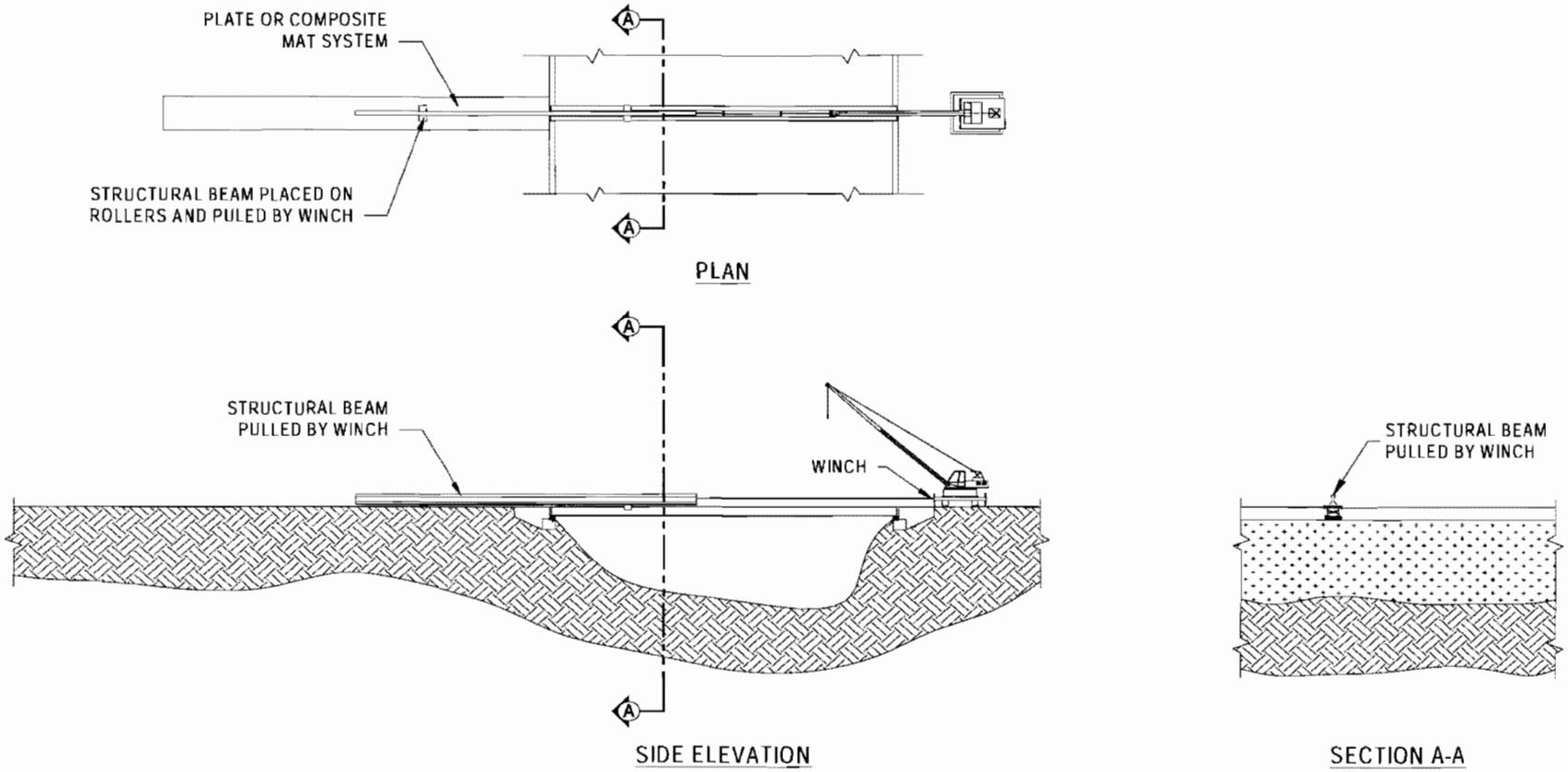

Figure 6.22 Structural Beam Placement

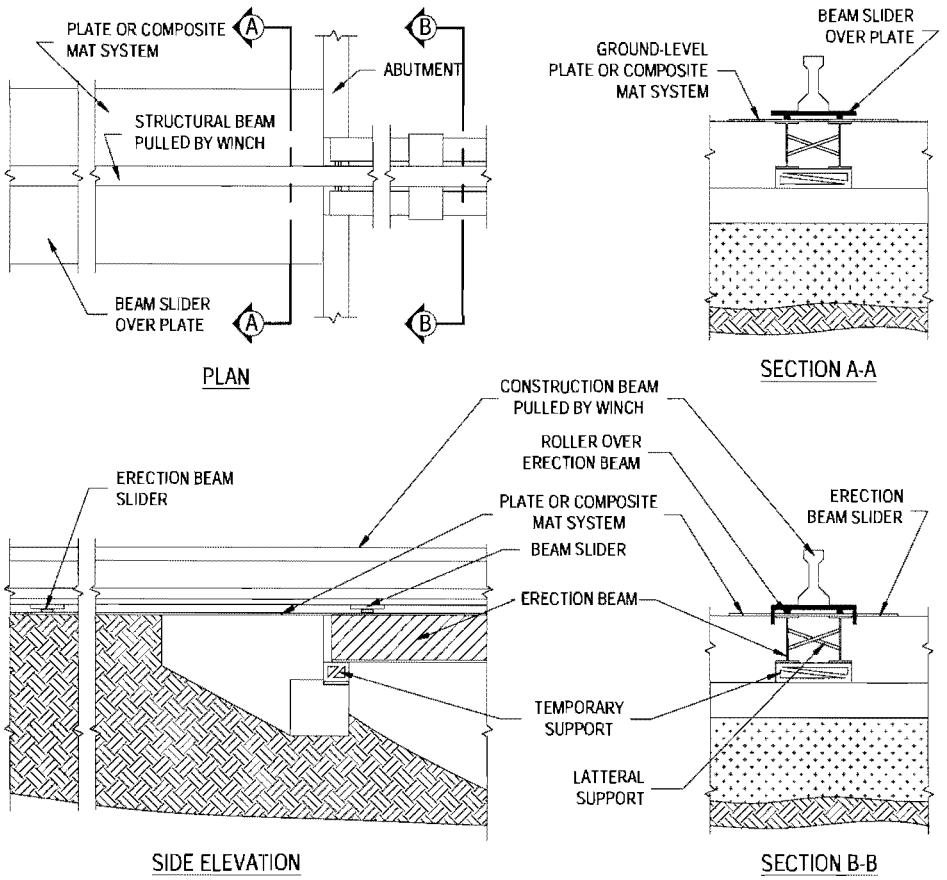

Figure 6.23 Beam Slider Details

Figure 6.24 shows the structural beams being set into place from the erection beams, while Figure 6.25 shows the bridge with all four structural beams placed and the temporary erection beams removed. Note that the erection system will be located near the center of the abutment, and it will be small enough to fit between the middle two structural beams. Therefore, it will not be necessary to move the erection system until all the structural beams are set and the system is no longer needed. Once all four structural beams are in place, the diaphragms can be bolted in place if needed as shown in Figure 6.25.

After the structural beams are in their final positions the 26-foot by 8-foot full-width deck panels will be placed. The first three or four deck panels will be placed by the crane located at the abutment. Figure 6.26 illustrates the panel placement process while the crane is on the ground.[12] After these first few panels are placed, the crane will move onto them to place the next few panels. This process will be repeated until all the panels are placed. Figure 6.27 demonstrates the panel placement process while the crane is on the deck. Figure 6.28 shows the bridge with all the panels and barriers placed.

[12] Note that this panel placement process is only for the 90-foot span where access is limited. For the 50-foot span, the first panels will be placed at the center of the span.

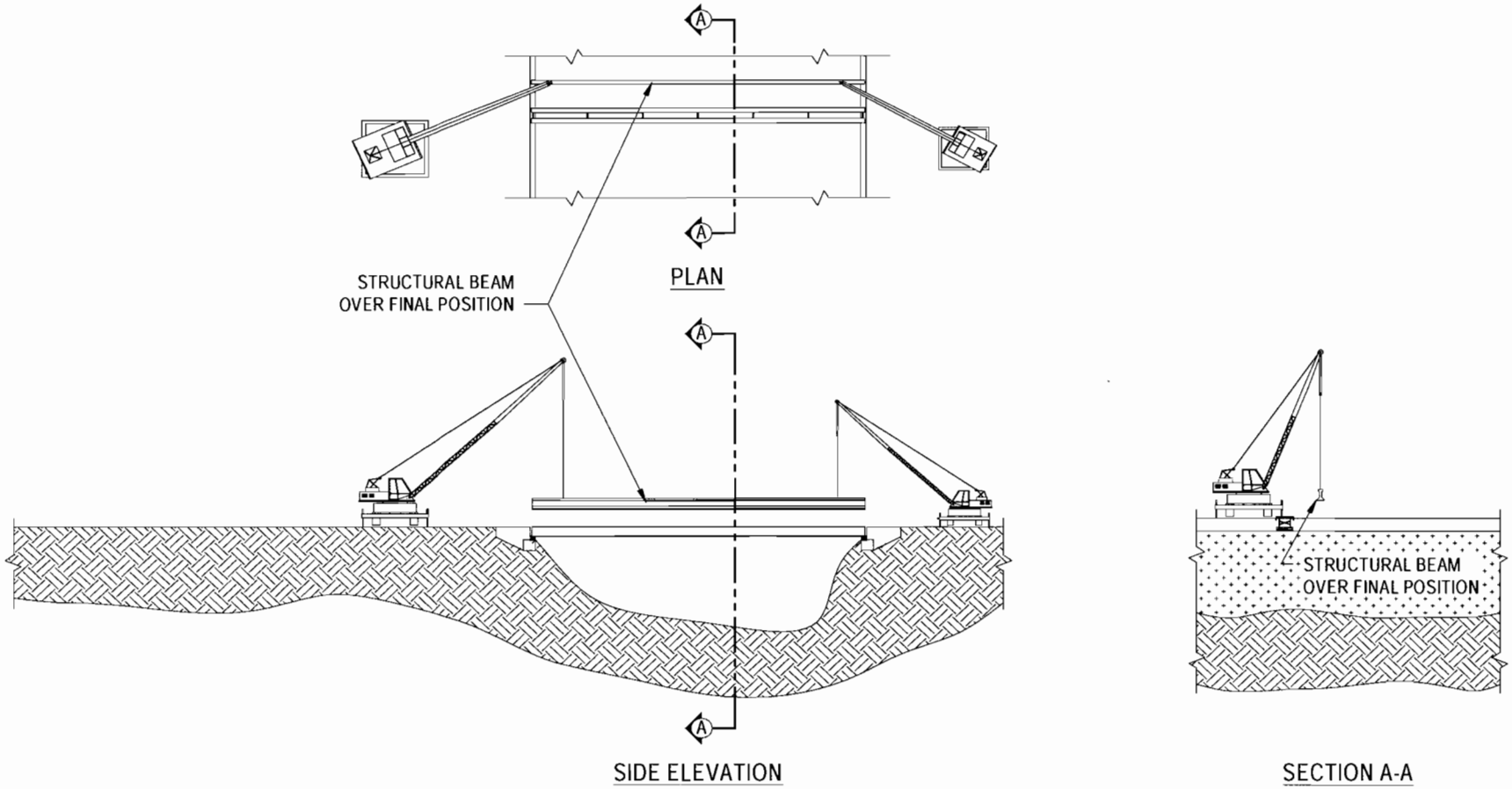

Figure 6.24 Structural Beam Being Set in Place

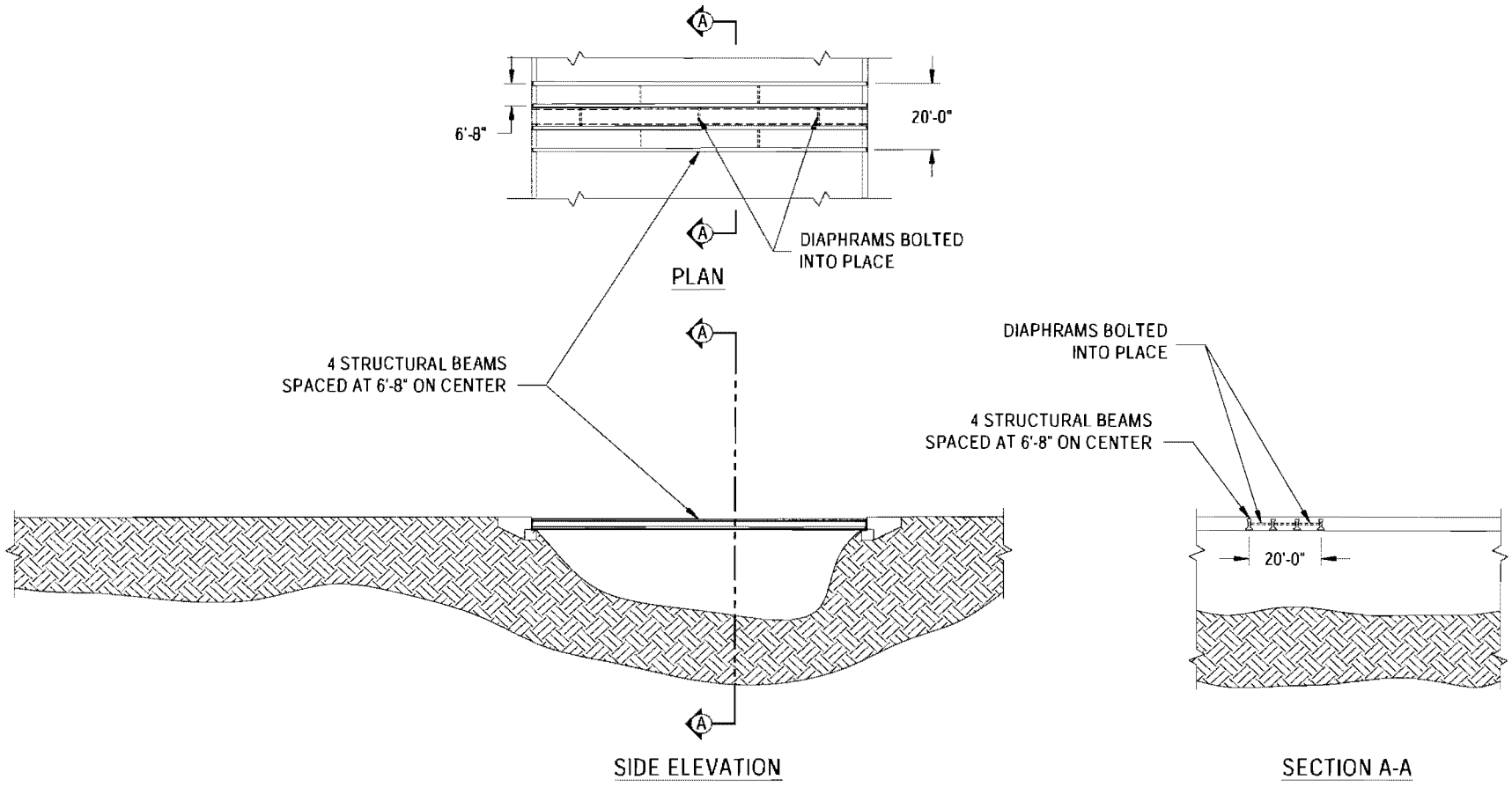

Figure 6.25 Bridge with All Four Structural Beams Placed

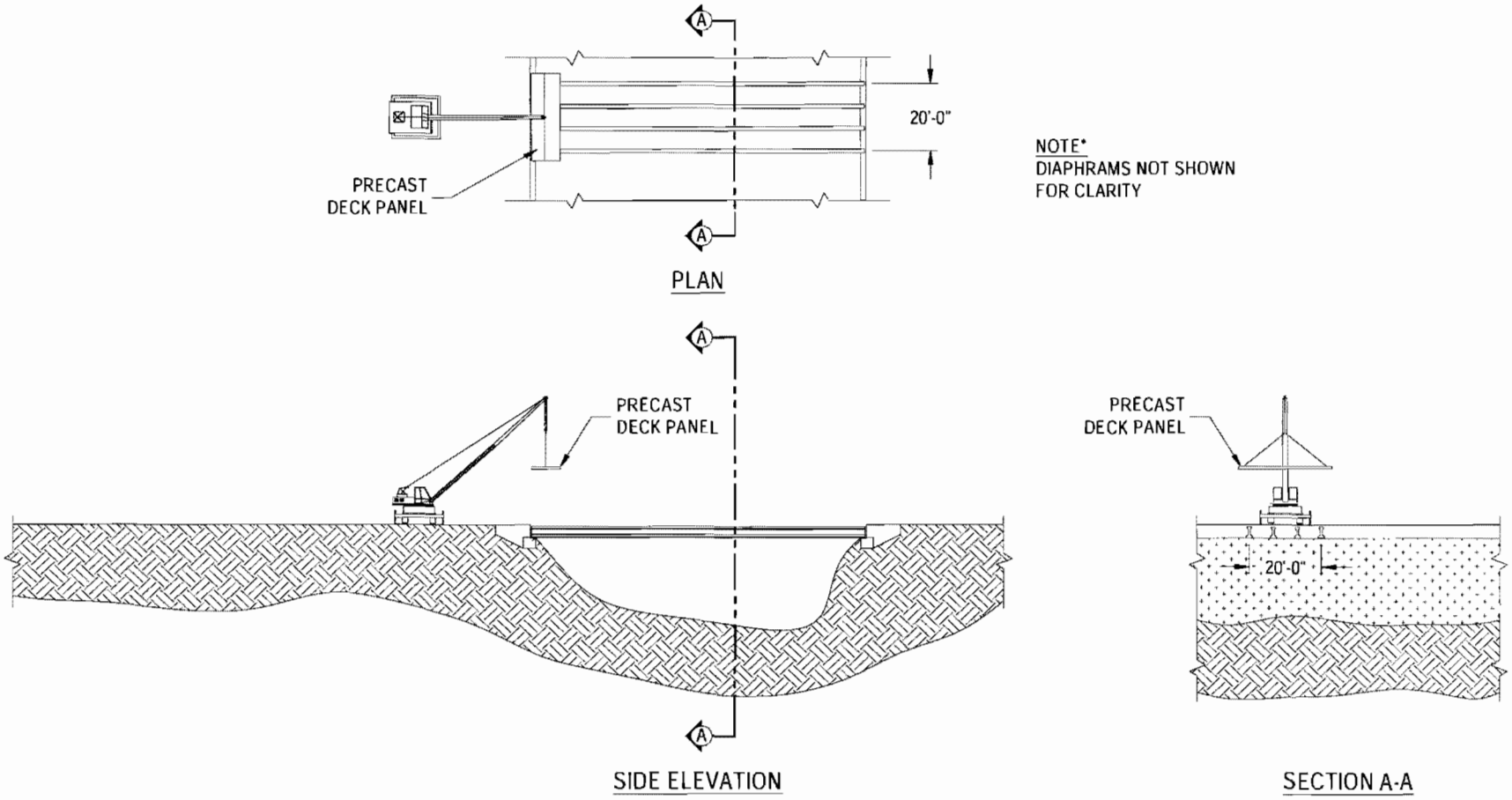

Figure 6.26 Placement of First Precast Deck Panels From the Ground Level

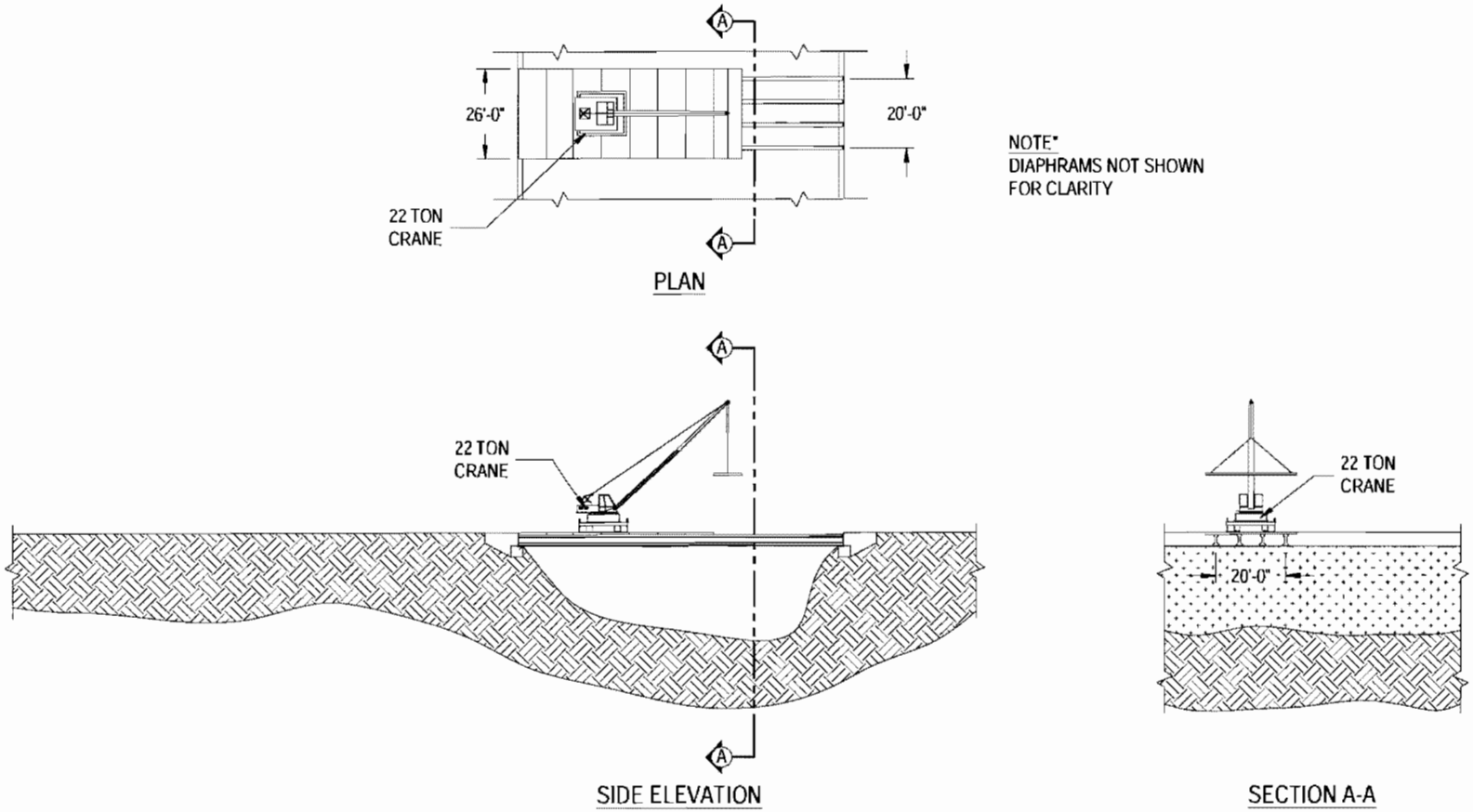

Figure 6.27 Placement of Remaining Precast Deck Panels From the Deck Level

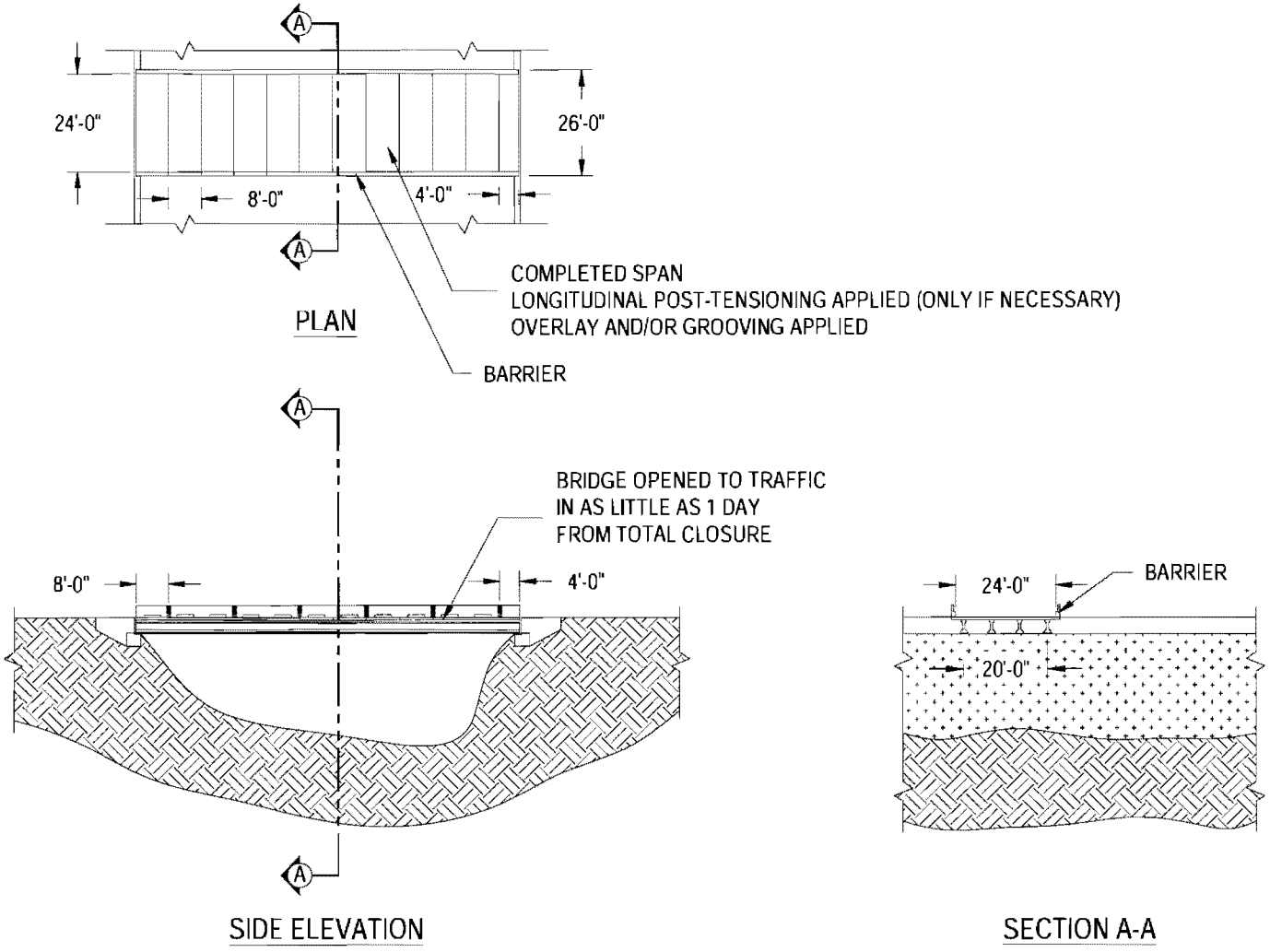

Figure 6.28 Bridge with Precast Deck Panels and Barriers Placed

6.3 PRECAST, POST-TENSIONED CHANNEL BRIDGE CONCEPT

A second superstructure concept for this off-system bridge research and design is an adaptation of the patented concrete channel bridge system. TTU researchers have worked closely with International Bridge Technologies on adopting the channel bridge concept to the particular needs of the off-system TxDOT bridges. In this approach, post-tensioning strands in the railings, acting as edge beams, provide the support needed by the full-width precast segments. The segments may be installed with erection beams in a manner similar to the installation of deck panels in the previously proposed system.

6.3.1 50-foot Prototype Case

The channel bridge for the 50-foot span is designed to accommodate a 24-foot-wide roadway with a minimum structural depth of two feet. This shallow depth is made possible by the rather short span and the longitudinal post-tensioning of the segments. The depth of the concrete edge beams has been reduced as much as possible to limit hydraulic forces in the event the bridge may be submerged during severe flooding. Figure 6.29 shows a side elevation view and a cross-section view of the bridge. A superimposed metallic railing can be used to contain the vehicular traffic. This approach will minimize the dead load of the bridge and will present a minimum obstacle to flood water. As an option, the edge beams can be widened to receive a sidewalk or bicycle path.

The bridge superstructure will be constructed of ten-foot-long match-cast segments assembled with epoxy in the joints. Longitudinal post-tensioning tendons will be placed within the edge beams. The slab in between the edge beams will be transversely prestressed. All precast superstructure segments will be similar except for the two abutment segments that will be shorter and each will contain a transverse beam. The superstructure will be simply supported on elastomeric bearings at the abutments. The precast segments will be made of 5,500-psi concrete.

The superstructure segments can be manufactured by the short cell method and delivered to the site by truck. The maximum segment weight will be approximately 60 kips (30 tons). The segments can be erected on temporary steel beams spanning from abutment to abutment. The segments will be launched from one abutment on sliding pads. After the segments are adjusted in line and by elevation, epoxy glue will be applied to the segment joints and the joints will be closed using longitudinal post-tensioning tendons. The railing supports can be installed on the precast segments ahead of time or later, if desired. There will be no need for an overlay.

In summary, this type of bridge presents several advantages:

- Good appearance due to the shallow structure, smooth bottom slab, and aesthetic treatment of the outside of the edge beams.
- High quality resulting from the deck being totally precast with high quality concrete.
- Fast speed of construction, with no requirement for pouring concrete at the site except for the abutments.
- Low maintenance.

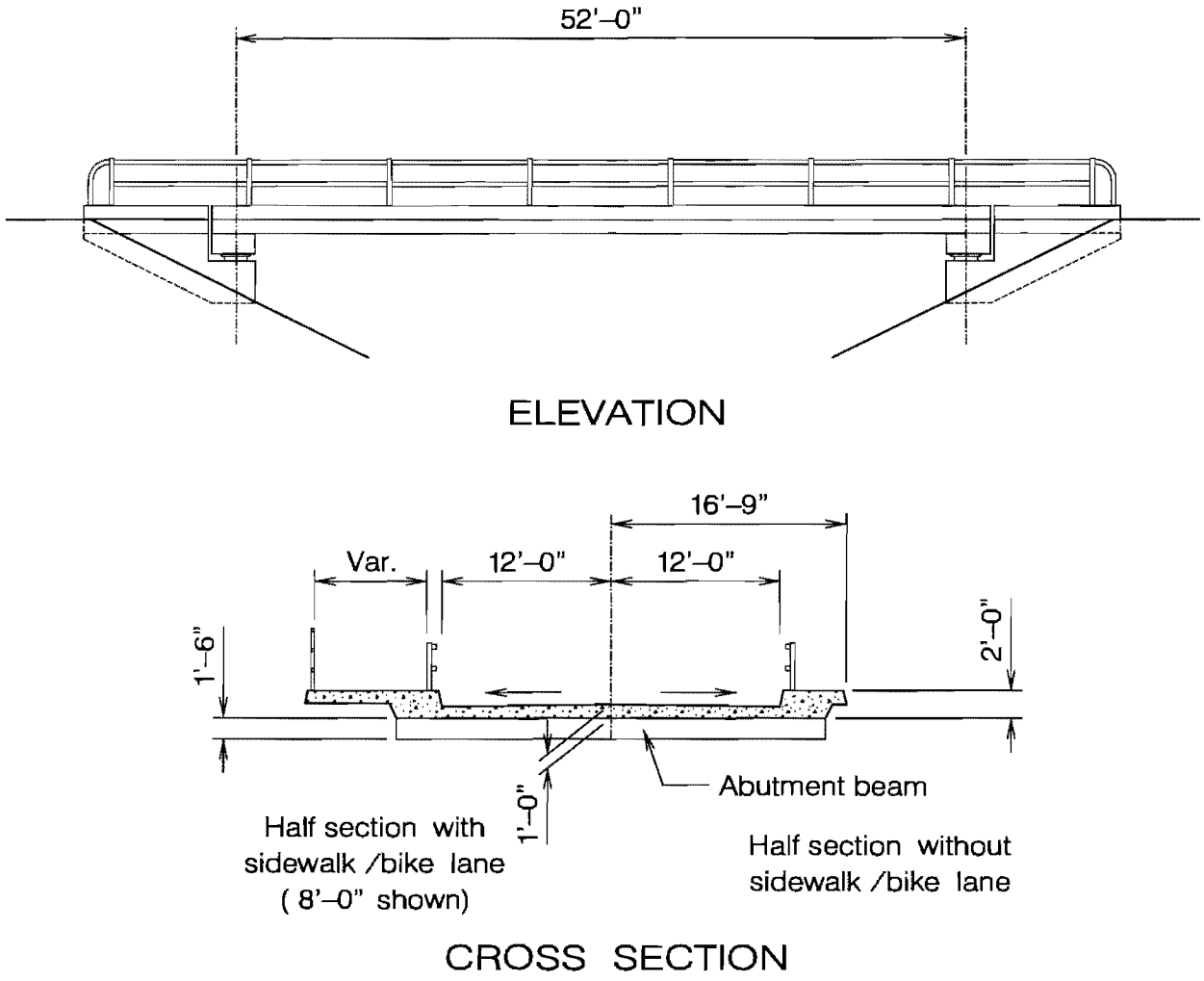

Figure 6.29 52-foot Shallow Channel Bridge (50-foot Clear Span)

The 52-foot *Shallow Channel* Bridge is estimated to have the following quantities:

- Concrete = 150 cubic yards
- Rebar Quantity = 15,000 lbs.
- Longitudinal PT = 8,500 lbs.
- Transverse PT = 3,200 lbs.

A rendering of this shallow section is shown in Figure 6.30. One can see how shallow the section is compared to the van.

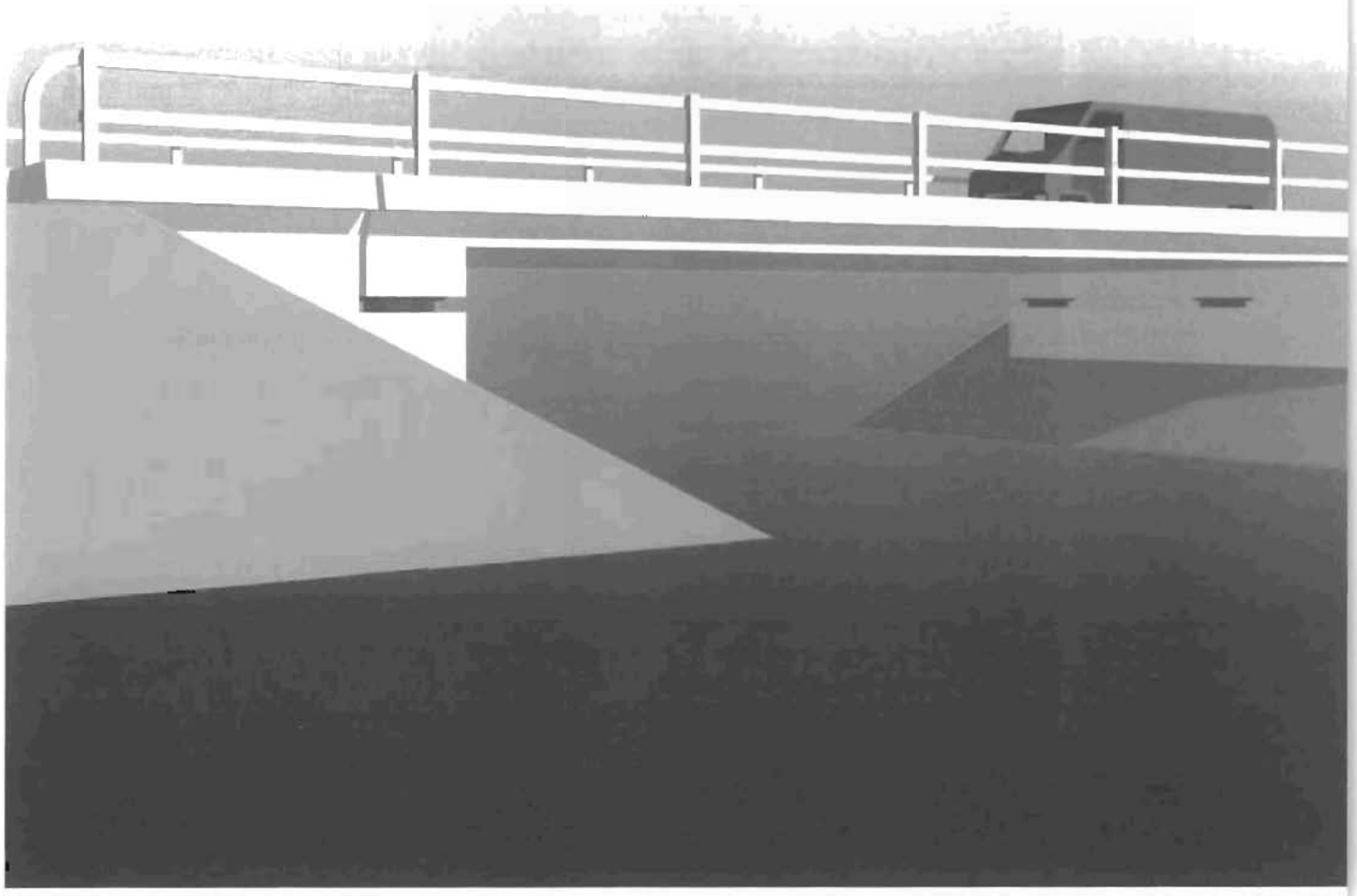

Figure 6.30 52-foot Shallow Channel Rendering

6.3.2 90-foot Prototype Case

The concept for the second prototype case with the 90-foot clear span is similar to the one described previously for the 50-foot clear span. However, due to the longer span length, the edge beams will be deepened to approximately four feet and the bridge will now be a typical "channel bridge" with the edge beams acting also as traffic barriers. In this case there will be no need for the metallic guardrails. Figure 6.31 shows side and cross-section views of this bridge.

The erection procedure will be similar to that for the 50-foot span. However, it would be beneficial if the temporary erection beams could receive an intermediate support at mid-span. Such a support would be relatively easy to construct and to remove and would cause very little disturbance. However, should no intermediate support be allowed from below, other means could be employed to achieve a temporary mid-span support (e.g., small temporary cable stays from each end). The precast segment weight for this bridge will be approximately 72 kips (36 tons).

The 92-foot channel section span is estimated to have the following quantities:

- Concrete = 207 cubic yards
- Rebar Quantity = 29,000 lbs.
- Longitudinal PT = 18,000 lbs.
- Transverse PT = 6,300 lbs.

A rendering of this section is shown in Figure 6.32. Though not as shallow as the 52-foot span shown in Figure 6.30, the 49-inch height is significantly less deep than a typical Type C beam with an eight-inch deck and a 27-inch high barrier (for a typical total section depth of 62-inches).

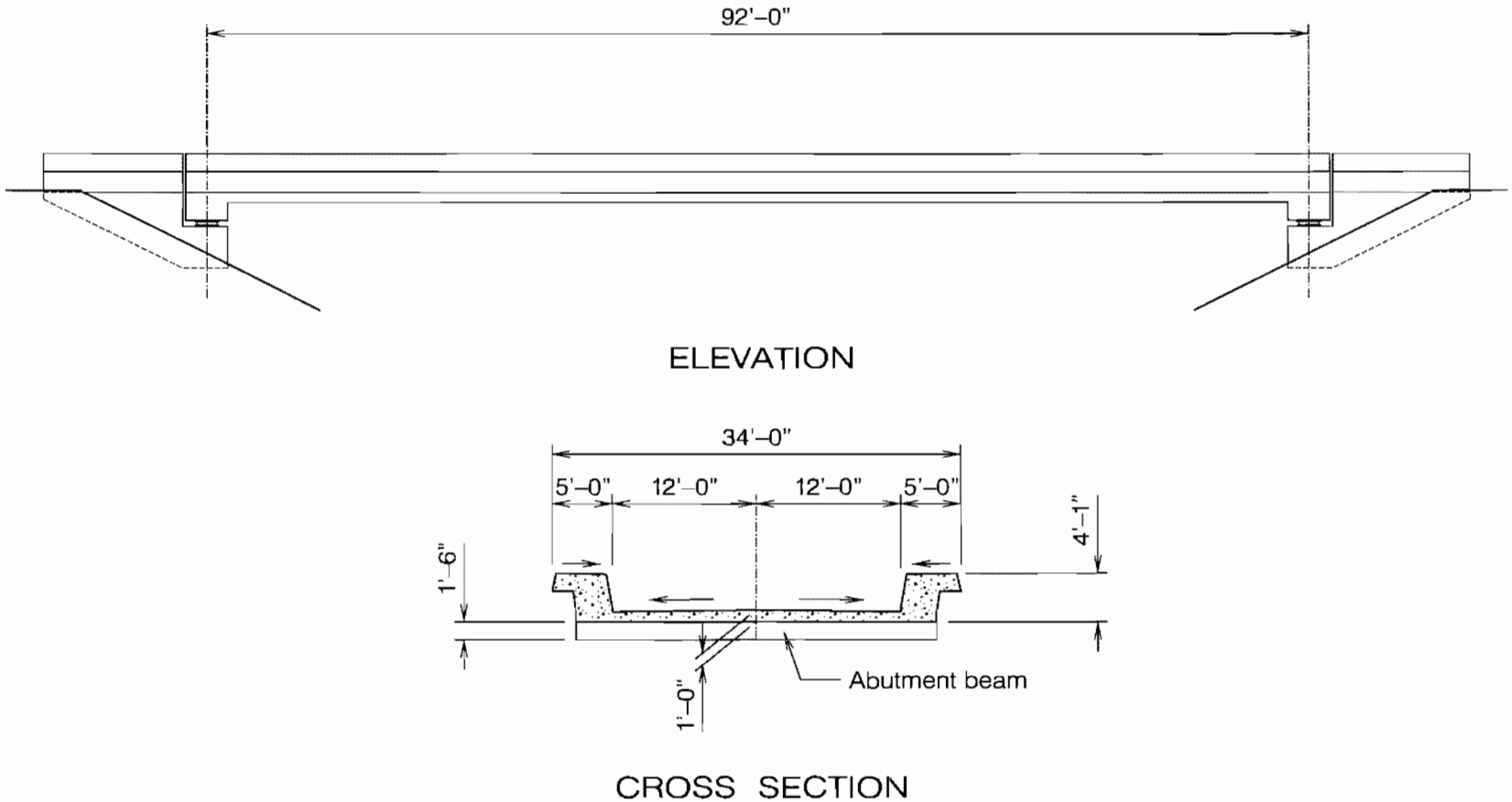

Figure 6.31 92-foot Shallow Channel Bridge (90-foot Clear Span)

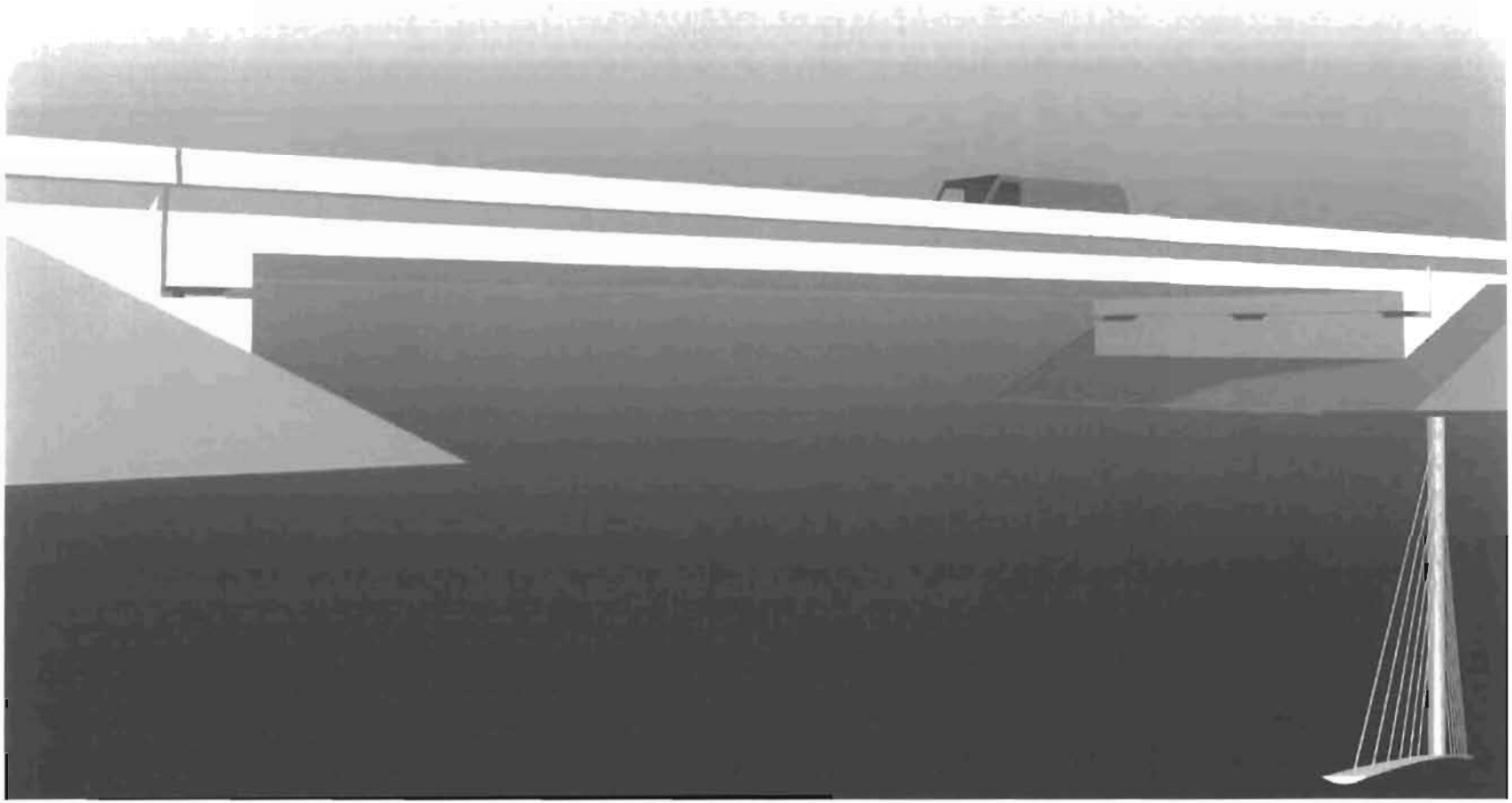

Figure 6.32 90-foot Shallow Channel Rendering

CHAPTER 7

SUMMARY, CONCLUSIONS, AND SUGGESTED FUTURE RESEARCH

7.1 SUMMARY

This report documents findings from a two-year competitive research study into innovative rapid replacement possibilities for off-system bridges in Texas. Possible solutions are limited by restrictions on:

- the type of equipment available in the area,
- the size of equipment that can be transported to a particular site,
- the overall project cost, and
- the desired long-term durability of the structure.

It is demonstrated that, in general, fast, efficient off-system bridge replacement is possible. However, off-system bridges, due to the restrictions listed above and to the typical rural locations, require somewhat unique design and construction solutions.

7.1.1 Background

Chapter 1 of this report provides a background of the research and describes the TTU approach to the problem. The TTU approach is to attempt to economically complete the placement of the beams and the full-width, full-depth deck panels in only one day whenever possible. Also, top-only construction methods are envisioned.

Background discussions regarding substructure and superstructure issues are covered in Chapters 2 and 3, respectively. For the substructure, driven piles, drilled shafts, auger piles, mini-piles, and other technologies are identified and discussed, including low-clearance solutions. For the superstructure, current TxDOT solutions, along with commercial / proprietary bridge systems, are reviewed and evaluated for off-system project requirements.

7.1.2 Contractual Issues

Chapter 4 presents a brief overview of the general construction strategies that can be followed, along with contractual issues that must be addressed. It is noted that significant changes in the current methods of construction and much-reduced times of completion will likely be required from TxDOT:

- incentives to the contractors for rapid completion,
- changes in the wording of the bid documents, and
- some type of assurance that a substantial amount of similar work will be let in the future (for contractors to be willing to invest in specialized equipment and training of personnel).

7.1.3 Substructure Solutions

Chapter 5 focuses on potential substructure solutions, including strategies and equipment that will allow major activities to take place without overly disrupting traffic.

One of these strategies is to construct new abutments slightly offset longitudinally and/or laterally from the current abutments. A longitudinal offset requires a slightly longer span length for the beams, but allows the abutments to be constructed "off line." That is, only one lane must be shut down at a time. Also, whatever work is completed during the day can be covered and reopened to traffic in the evening if desired. A lateral offset would require a wider abutment and perhaps additional right of way. It may also require drilling of piers through the existing bridge deck.

7.1.4 Superstructure Solutions

Two innovative superstructure solutions, one with precast full-width, full-depth deck panels on traditional beams (the PCP_{ffwd} system) and the other using "*Shallow Channel Bridge*" concepts, are presented in Chapter 6. Both 50- and 90-foot clear span solutions are presented. Both solutions involve top-only construction. The 50-foot span requires no specialized equipment; it can be built with just one 30-ton crane. For the 90-foot span only, one 30-ton and one 22-ton crane, plus specialized temporary steel erection beams, are required. Significantly, with only this minimum amount of equipment, a Type C precast concrete I-beam can be placed on the 90-foot clear span without stream access.

The *shallow-channel* approach provides perhaps the most aesthetically pleasing solution. Also, it has hydraulic profile characteristics that are superior to any other bridge system considered. Construction costs will be greater than for other options unless a number of similar bridges are included to help amortize the cost of the steel forms.

7.1.5 Other Issues

In addition to speed of construction, durability is of primary concern. The goal is to not have to replace these bridges again for at least 50 years, perhaps even 75 years. Such a lengthy design life requires adequate corrosion protection for steel components and precast elements for concrete.

The benefits of longitudinal post-tensioning in the deck are discussed, along with the potential unreliability of the tendon grouting operation. An unbounded mono strand tendon that does not require grouting is suggested.[13]

7.2 CONCLUSIONS

7.2.1 Substructure

Either precast concrete elements or steel elements can be used to speed the substructure construction process. The choice for the substructure generally is site specific. In a non-corrosive environment where speed of construction outweighs cost considerations, steel piles are a good option. In most recent situations in Texas, either precast concrete piles or concrete drilled shafts have been selected for the foundation.

Over the past two decades, precast elements for columns, bent caps, templates, and abutments have become more popular. This "precast" approach can significantly increase

[13] See Appendix B.

the speed of new construction. Though precast placements can be more costly than C.I.P. elements, the associated construction time reductions are impressive. Also, the technology required for successful implementation is not complex and is known in the field.

For off-system bridge replacement, precasting of elements is not enough to satisfy the concern of minimizing traffic disruption. The goal is to replace existing abutments/columns with new ones without shutting down the bridge for any great length of time. Thus, the research presented in this report assumes the substructure elements, other than drilled shafts, will be precast. For these bridge replacement projects, strategies are presented for "offset" construction. "Offset" construction generally refers to constructing piles/abutments either wider than the current foundation or at a location longitudinally just before or after the current abutment. The former case requires a wider bent cap and the latter requires a longer span. However, both situations allow major time-consuming foundation activities to be constructed with little to no disruption to traffic. Once the major foundation work is complete, a precast abutment, bent cap, etc. can be placed fairly quickly.

7.2.2 Superstructure

Though gains in substructure construction speed are possible, significant time savings primarily can be achieved if the C.I.P. superstructure deck pour is eliminated. TxDOT, with either steel or precast girders and partial depth precast panels (PCP), already implements one of the fastest and least costly bridge deck construction strategies. Nevertheless, the C.I.P. portion of the bridge construction can consume one or more calendar months in the field.

Therefore, this research has focused on elimination of the C.I.P. deck pour. A modification to the current TxDOT PCP approach is the use of a fast replacement, full-width, full-depth precast concrete panel, or PCP_{ffwd}, where individual panels are set on specially matched girders. Though a grout pour is required, "top-only" construction is possible. The PCP_{ffwd} has the potential to complete the bridge installation in as little as one day after abutment/columns are ready. Longitudinal post-tensioning is optional.

The other superstructure design presented, referred to as a "*Shallow-Channel*," is a derivation of the patented "*Channel Bridge*". This precast solution potentially provides the most aesthetic solution, and the one with superior hydraulic properties. Costs for the rights to the patent have been estimated to be $3 per square foot of bridge deck area.

Other systems exist that also show promise including the Inverset® method, the Inverset II®, NuDeck, etc. For any given off-system bridge project, it is important to be familiar with all available systems, as each off-system bridge can be somewhat unique. It is likely that only slight (or no) modifications to current bridge solutions are required to meet the design objectives for any given off-system bridge.

7.3 SUGGESTED FUTURE RESEARCH

There is a substantial amount of additional work that is warranted. One primary objective revolves around finalization of details for proposed superstructure designs,

including details on the erection beams, full width/depth panels, multi-directional connectors and shear connection design. Additional items to be considered include:

- Substructure issues
- Contracting issues
- Determination of the amount of unbonded PT required in the deck
- Leveling plate details
- More optimal panel length (e.g., 8 feet may be too short) determination
- Crane costs and options

Another objective of future research will be to identify issues pertinent toward an actual implementation of the chosen design, i.e., refinement of the design and development of mock-up tests for certain innovative components of the design. This issue identification objective could be met by selecting an acceptable upcoming bridge replacement project and modifying it for rapid construction. Such a full-scale "model" could serve to identify what areas perform better and what areas will continue to require improvement.

Additional research topics that potentially can be explored are numerous. Areas felt to be the most important are listed below:

- Shallower, optimized deck panel design
- Analysis and mock-up tests of shear screws and shear keys
- Bolt-down panel connection analysis
- Low-headroom substructure procedure study
- Elimination of grout pour
- Match-casting of panels to beams in yard
- Continuation of research into contract language issues
- Multi-directional connector design with a "locking" mechanism
- Potential for modified concrete and steel girders
- Extensions of innovative off-system technology to mainline/urban bridges
- Scheduling of work tasks for contractor
- The potential for FRP panels and/or FRP erection beams
- Shear studs vs. screws
- Potential beam delivery truck modifications
- Cost estimation of the system
- Refinement of ideas related to abutment construction innovations

Evaluation of a shallower, optimized deck panel would focus on a panel with an average thickness of 5" or less, that would "arch" from a maximum of 8" at the girder to a minimum of about 4" midway between girders. Match casting of the panel to the beam is difficult as the beam has camber in the yard, but not in the completed structure. Research into how to overcome this varying obstacle is warranted.

The goal of elimination of the grout pour should be high on the list of future study areas. Such research would investigate the potential for using bolt-down connections only. To accomplish this objective, analyses and mock-up tests will likely be required. Included in these analyses and tests are shear keys, shear pockets, shear screws and multi-directional connectors.

Contracting issues, scheduling and cost estimations will continue to play into the overall solution of the off-system problem. Component improvements, such as modified concrete and steel shapes, the use of FRP components and equipment improvements may also play a role. Though the number of individual tasks in need of future research is numerous, none are considered to be overly complex or to contain a high amount of risk. In addition, with the goal of at least one calendar month of field work eliminated from every bridge replacement project, almost all of the potential research tasks appear warranted.

REFERENCES

1. Bailey Bridges, Inc. Retrieved 8/15/2002. http://www.baileybridge.com/index.html.

2. CON/SPAN Bridge Systems. Retrieved 7/21/2002. http://www.con-span.com.

3. Communication Channels, Incorporated, "Pre-Fabs Bridge the Gap," American City & County, V. 104, August 1992, pp. 64-66.

4. Issa, M. A., Yousif, A.A., and Issa, M. A., "Experimental Behavior of Full-Depth Precast Concrete Panels for Bridge Rehabilitation," ACI Structural Journal, V.97, No. 3, May-June 2000, pp. 397-407.

5. Link-Belt Construction Equipment. Retrieved 7/25/2002. http://www.linkbelt.com.

6. Steadfast Bridges. Retrieved 7/15/2002. http://www.steadfastbridge.com.

7. U.S. Bridge. Retrieved 7/2/2002. http://www.usbridge.com.

8. Yamane, T., Tadros, M. K., Badie, S.S., and Baishya, M. C., "Full Depth Precast, Prestressed Concrete Bridge Deck System," PCI Journal, V. 43, No. 3, May-June 1998, pp.50-66.

APPENDIX A

ADDITIONAL INFORMATION FOR RESEARCH PROJECT 0-4375

Background

Research Project Number 0-4375 "Innovative Design and Construction Methods for Off-System Bridges" had the goal of developing a bridge system for the rapid, cost-effective, and functional replacement of off-system bridge structures. Typical constraints that affect off-system bridge construction are:

- Off-system bridges are often shorter in overall length than on-system bridges (200 feet or less in length consisting of one to three short spans).
- Off-system bridges are narrower in width (24, 28 or 30 feet) than on-system bridges.
- There is less free board provided so off-system bridges may be more prone to overtopping by floodwaters and the chances of drift in the waterway may be higher.
- The average daily traffic counts (ADT) may be lower but the size of the vehicles using the structures may be just as large (i.e., school buses, farm, ranch, and oil field equipment) as on-system bridges.
- Site access can be difficult for large construction equipment because of narrow width roads, sharp curves and steep grades leading up to an off-system bridge. For example, distances and travel times from concrete ready mix plants can be great.
- Construction costs may be higher due to the remoteness of the site.
- A detour route around a bridge site closed for construction can be very long due to the lack of other roads in the area.

The following aspects/possibilities were considered before the proposed solutions were delivered:

- Use of cast-in-place concrete, precast concrete, steel, or other materials as appropriate.
- Construction details and pre-assembled components must facilitate construction speed.
- Use of special specifications written to facilitate construction speed.
- Use of proprietary, complete system products that arrive at the site ready to assemble.
- Drawing on the expertise of the construction industry to help determine ways in which to shorten construction time.
- All parts of the process, from the earliest inception of a bridge project to construction project completion should be considered in development of the proposed solution.

The proposed system(s) must be based on a consistent set of design criteria and constraints, which consider typical off-system applications. To help with this requirement, the National Bridge Inspection (NBI) data has been examined to characterize the critical

population of off-system bridges and to determine the population of off-system bridges recently constructed. In addition, information on current TxDOT design and construction practice for off-system bridges has been evaluated.

Characteristics of Texas Off-System Bridges from NBI Data

Three different Texas off-system bridge populations were analyzed to help focus on solutions that have the most widespread application and benefit:

- Those classified as structurally deficient (2,360 structures)
- Those classified as structurally deficient or functionally obsolete (6,900 structures)
- Those constructed since 1980 (7,100 structures)

The structurally deficient and functionally obsolete populations represent those bridges which require replacement in the near future. Structural deficiency indicates that the load carrying capacity of the bridge is insufficient to carry current loads or has been measurably reduced. Functional obsolescence generally means that the geometrics in terms of width, clearance, etc. do not meet current standards and negatively affect traffic flow, or the hydraulic opening provided is not sufficient. Structurally deficient bridges represent the most critical population, followed in importance by the functionally obsolete population. The population constructed since 1980 (i.e., "recently built") represents the current state-of-practice with regards to off-system bridge construction.

The NBI data examined included the bridge overall length, the approach roadway width, the substructure type below ground, and the superstructure type. The majority of the attached figures graphically depict this data both in terms of the numbers of bridges and the percentages of the three population types. A number of interesting statistics result from this NBI data analysis:

- over 95% of each of the off-system bridge populations studied cross a waterway
- 70% of all "structurally deficient" off-system bridges have a length less than 60 feet, and 50% a length less than 45 feet
- 70% of all "structurally deficient or functionally obsolete" off-system bridges have a length less than 85 feet, and 50% a length less than 55 feet; the same holds true for recently built off-system bridges
- 95% of all "structurally deficient," 77% of all "structurally deficient or functionally obsolete," and 69% of all "recently built" off-system bridges have an approach roadway width less than 24 feet
- Of the "recently built" off-system bridge population, at least 26% were steel girders, 26% prestressed concrete, 12% reinforced concrete, and 10% timber (26% of the population was unclassified)
- While large percentages of certain superstructure types (such as steel girders and trusses) and substructure types (such as steel and timber piles) are associated in large percentage with "structurally deficient" off-system bridges, this is largely due to their age.
- At least 52% of all "structurally deficient" off-system bridges used pile foundations, compared to 3% using drilled shafts (33% did not have the foundation type classified).

- At least 41% of all "structurally deficient or functionally obsolete" off-system bridges used pile foundations, compared to 15% using drilled shafts (34% did not have the foundation type classified).
- At least 32% of all "recently built" off-system bridges used pile foundations, compared to 18% using drilled shafts (48% did not have the foundation type classified).

Current TxDOT Off-System Bridge Design and Construction Practice

TxDOT currently uses a variety of bridge types for off-system bridge replacement projects. Table A indicates the various bridge types and the characteristics of each. TxDOT supports a number of standard details for some of these bridge types and they can be found on the internet at:

http://www.dot.state.tx.us/insdtdot/orgchart/cmd/cserve/standard/bridge-e.htm

Abutments for these bridges typically are of the perched/stub type and consist of cast-in-place reinforced concrete caps, backwalls, and wingwalls. The abutment caps are supported by drilled shafts or prestressed concrete piling. Interior bents for these bridges typically consist of cast-in-place reinforced concrete caps supported by columns/drilled shafts or full-height piling (trestle pile bents). Abutments and bents may use steel H-piles for foundation elements, though deterioration may occur on these bents in wet-dry soil conditions.

Because bridge shown in the table types have been widely used, any new solution chosen is likely to be a modification or refinement of one of these current bridge types.

Table A Typical TxDOT Off-System Bridge Types

Type	Span	Depth	Comments
Prestressed Concrete I-Beams[1]	Type A 30-50' Type B 30-65' Type C 30-85'	Type A 3.1' Type B 3.6' Type C 4.1'	Most common bridge type CIP slab requires significant time
Prestressed Concrete Box Beams[2]	B20 30' to 60' B28 40' to 80'	B20 2.1' B28 2.8'	Asphalt-on-beam option (minimal superstructure concrete) Relatively shallow section
Prestressed Concrete Slab Beams[2]	SB12 30' to 40' SB15 30' to 50'	SB12 1.4' SB15 1.7'	Shallow section Simple construction No large scale production yet
Prestressed Concrete Double Tee Beams[1]	T21 30' to 35' T27 30' to 45' T35 30' to 60'	T21 2.1' T27 2.6' T35 3.3'	Ashpalt-on-beam option (minimal superstructure concrete) Welding required to connect beams
CIP Slab and Girder (Pan Form)[1]	30' 40'	2.0' 2.8'	No large precast elements to handle Contingent on contractors w/ forms Durability questions (cracking)
CIP Slab[2]	25' 40'	1.3' 1.6'	No large precast elements to handle Extensive formwork (slow construction) Durability questions (cracking)

Rolled Steel with CIP Slab[3,4]	W21x62 30' W30x116 50' W40x167 70' W36x260 90'	W21x68 2.4' W30x116 3.2' W40x167 4.0' W36x260 3.7'	Beams can be salvaged from demolition, otherwise steel is costly Lighter "prefabricated" sections CIP slab takes some time

1. Standards available
2. Working drawings available and standards under development
3. Standards planned
4. Designs based on AISI Plans for Short-Span Steel Bridges

Recommendations for Proposed Off-System Bridge Solutions

Based on these investigations, the off-system bridge solutions can be limited as follows:

Feature Crossed:

- Waterway with occasional overtopping by flood events.
- Span-to-depth ratio of superstructure minimized to maximize freeboard.

Two Bridge Configurations w/ Access Stipulations:

- One single span bridge with a total length of 30 to 50 feet and channel access allowed
- One single span bridge with a total length of 70 to 90 feet and channel access NOT allowed

Bridge Width:

- An overall roadway width of 24 feet minimum (26 feet overall including rails).
- The bridge system must accommodate standard TxDOT rails, satisfying NCHRP Report 350, Test Level 3 criteria.

Foundation Type:

- The solution should work with: prestressed concrete piling, steel H-piles, or drilled shafts.

Construction Requirements:

- The solution must be rapid and simple.
- The remoteness of the site and the difficulty in site access must be considered.

Texas Off-System Bridges: Overall Bridge Length

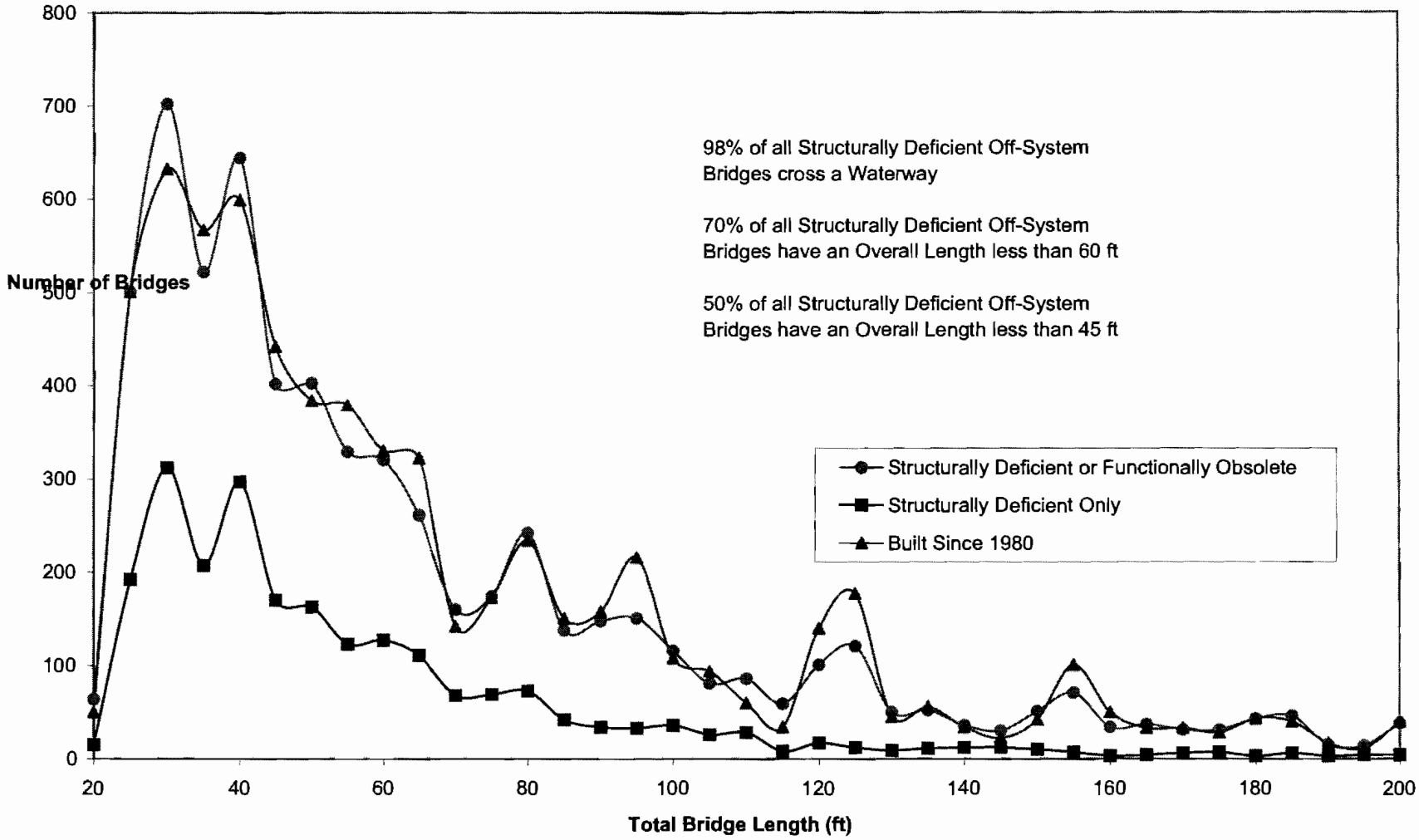

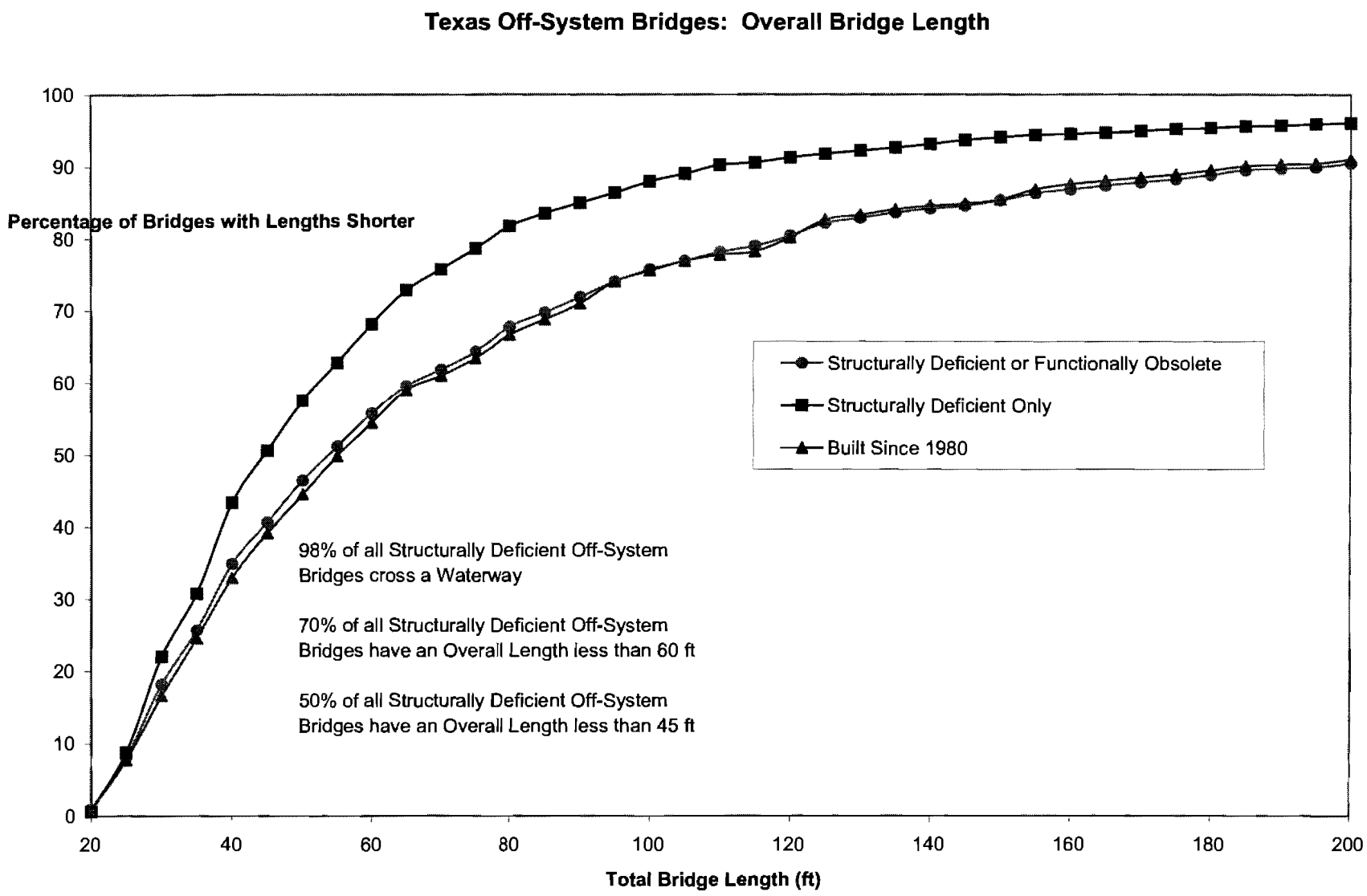
Texas Off-System Bridges: Overall Bridge Length
Percentage of Bridges with Lengths Shorter
Total Bridge Length (ft)
0
10
20
30
40
50
60
70
80
90
100
20
40
60
80
100
120
140
160
180
200
Structurally Deficient or Functionally Obsolete
Structurally Deficient Only
Built Since 1980
98% of all Structurally Deficient Off-System Bridges cross a Waterway
70% of all Structurally Deficient Off-System Bridges have an Overall Length less than 60 ft
50% of all Structurally Deficient Off-System Bridges have an Overall Length less than 45 ft

Texas Off-System Bridges: Approach Roadway Width

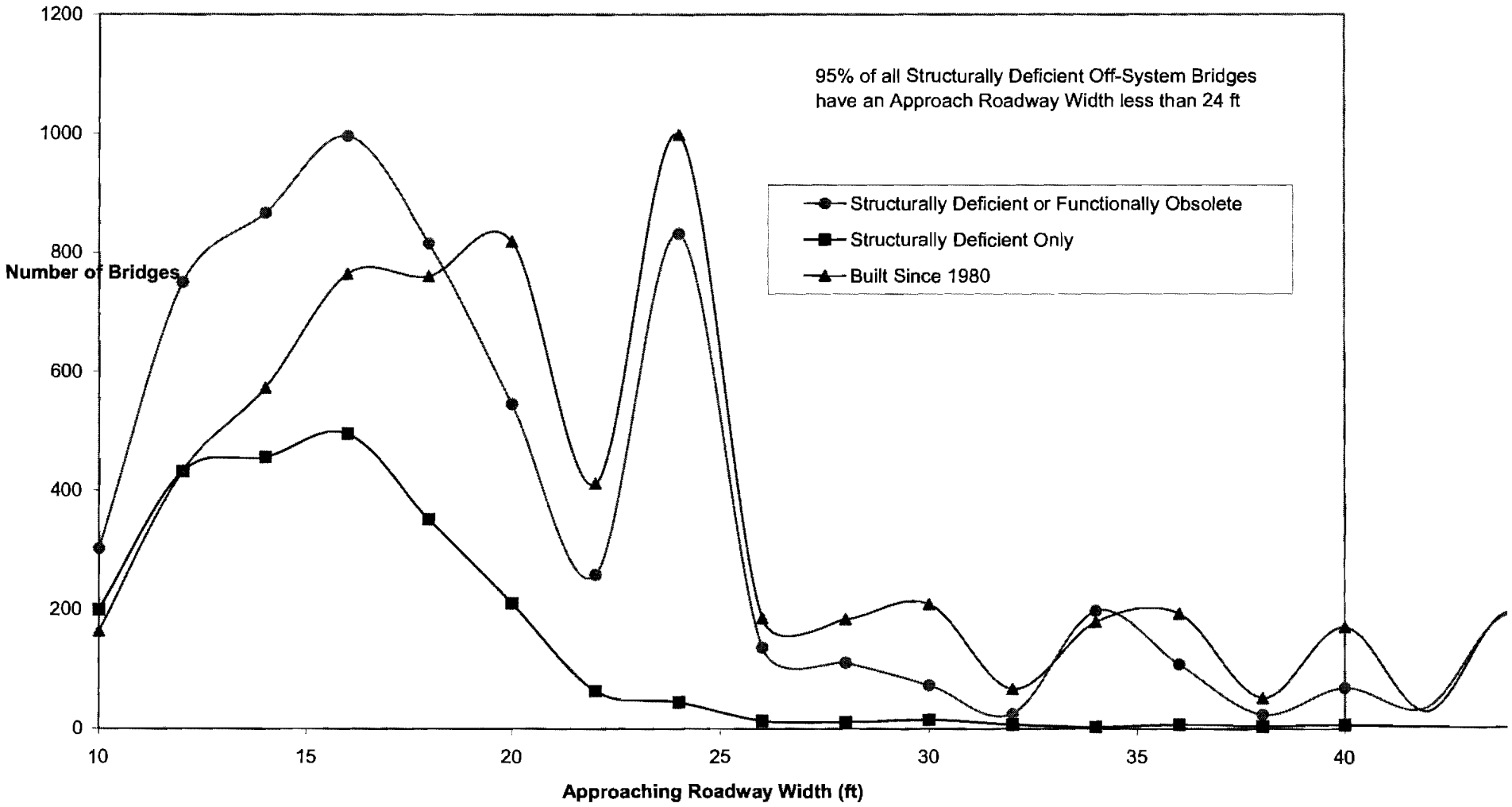

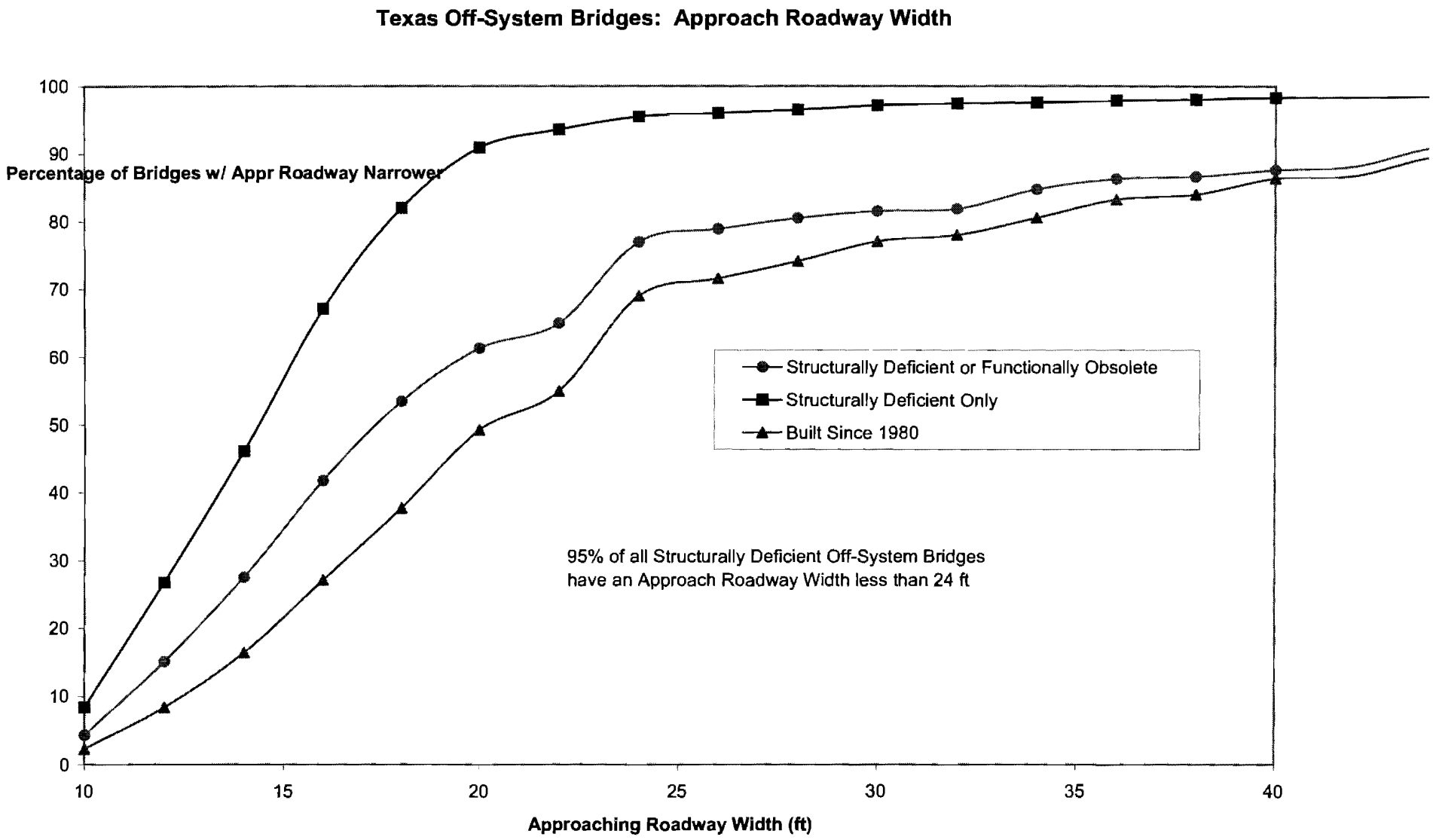
Texas Off-System Bridges: Approach Roadway Width
Percentage of Bridges w/ Appr Roadway Narrower
100
90
80
70
60
50
40
30
20
10
0
10
15
20
25
30
35
40
Approaching Roadway Width (ft)
Structurally Deficient or Functionally Obsolete
Structurally Deficient Only
Built Since 1980
95% of all Structurally Deficient Off-System Bridges
have an Approach Roadway Width less than 24 ft

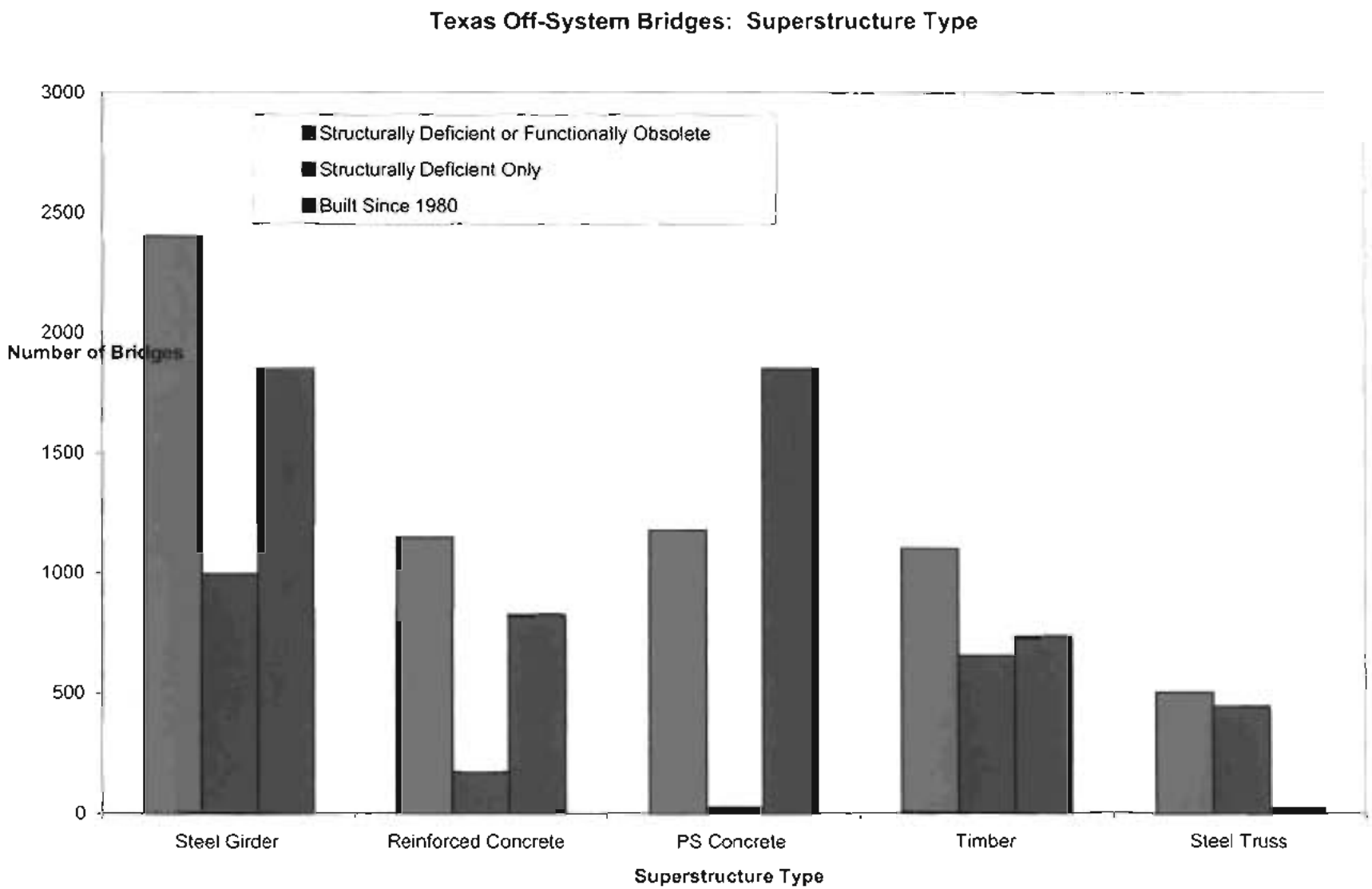
Texas Off-System Bridges: Superstructure Type
Structurally Deficient or Functionally Obsolete
Structurally Deficient Only
Built Since 1980
Number of Bridges
3000
2500
2000
1500
1000
500
0
Steel Girder
Reinforced Concrete
PS Concrete
Timber
Steel Truss
Superstructure Type

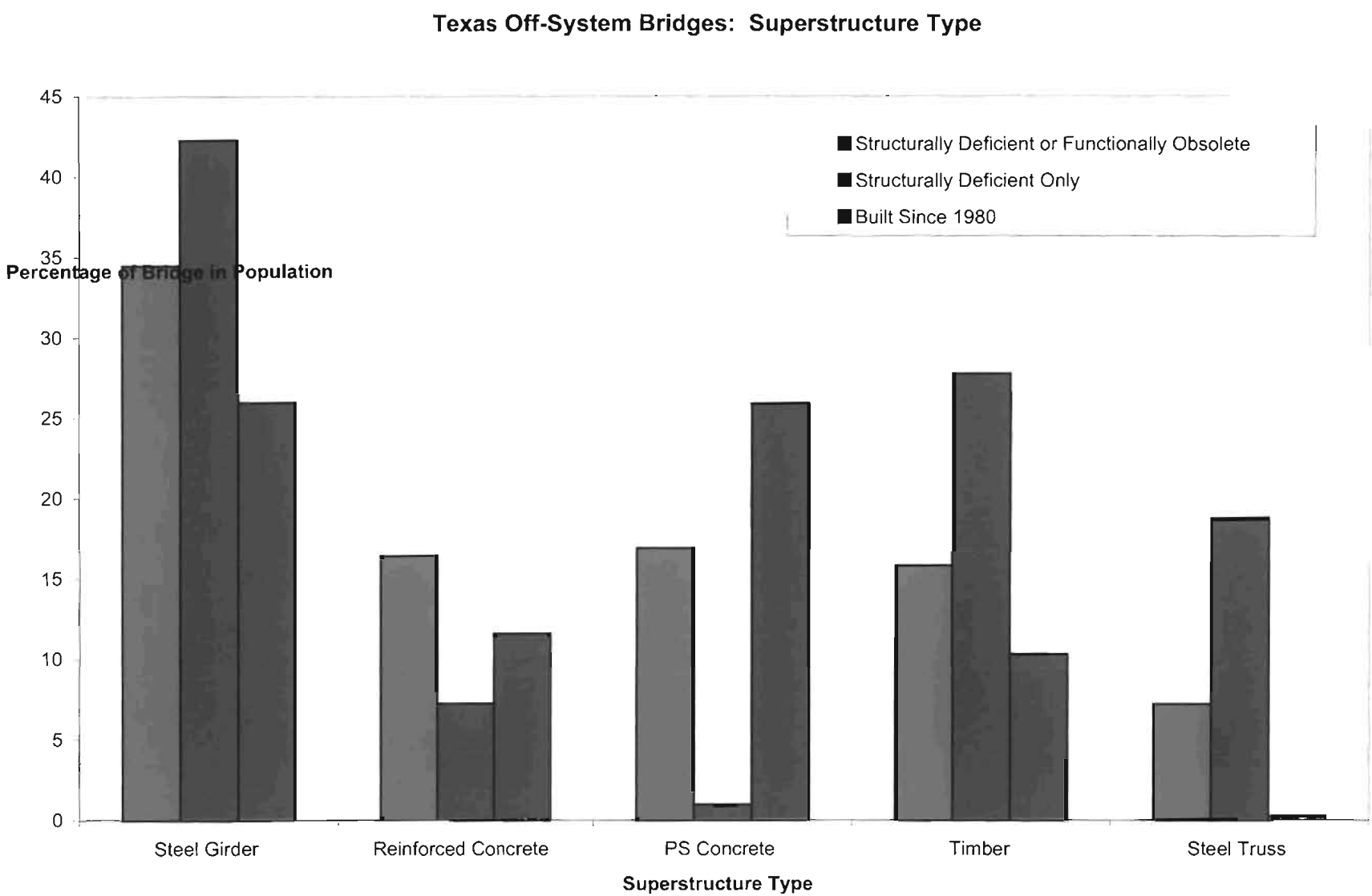
Texas Off-System Bridges: Superstructure Type
Structurally Deficient or Functionally Obsolete
Structurally Deficient Only
Built Since 1980
Percentage of Bridge in Population
45
40
35
30
25
20
15
10
5
0
Steel Girder
Reinforced Concrete
PS Concrete
Timber
Steel Truss
Superstructure Type

Geographic Distribution of Superstructure Type for Recent Off-System Bridges

Built Since 1980

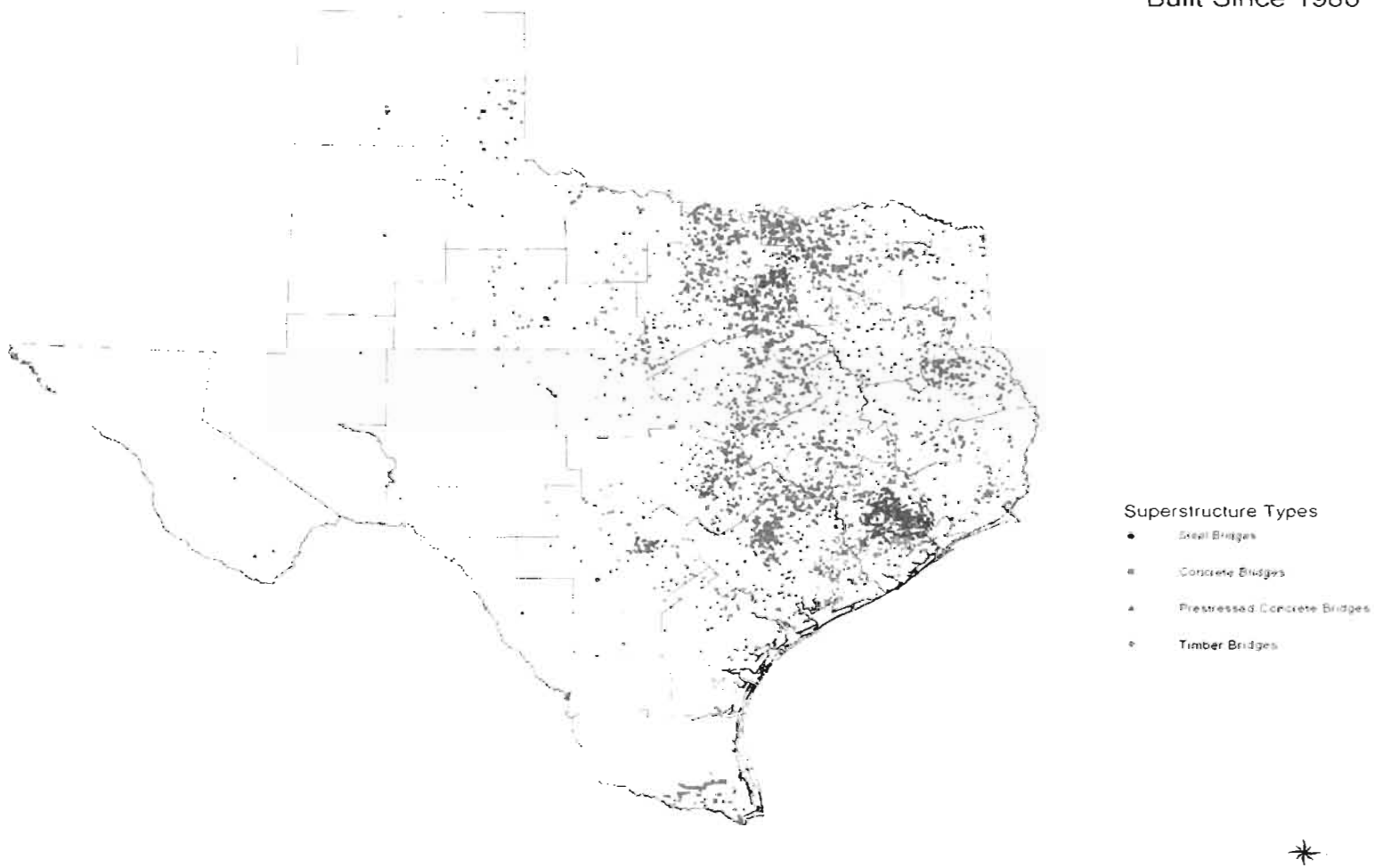

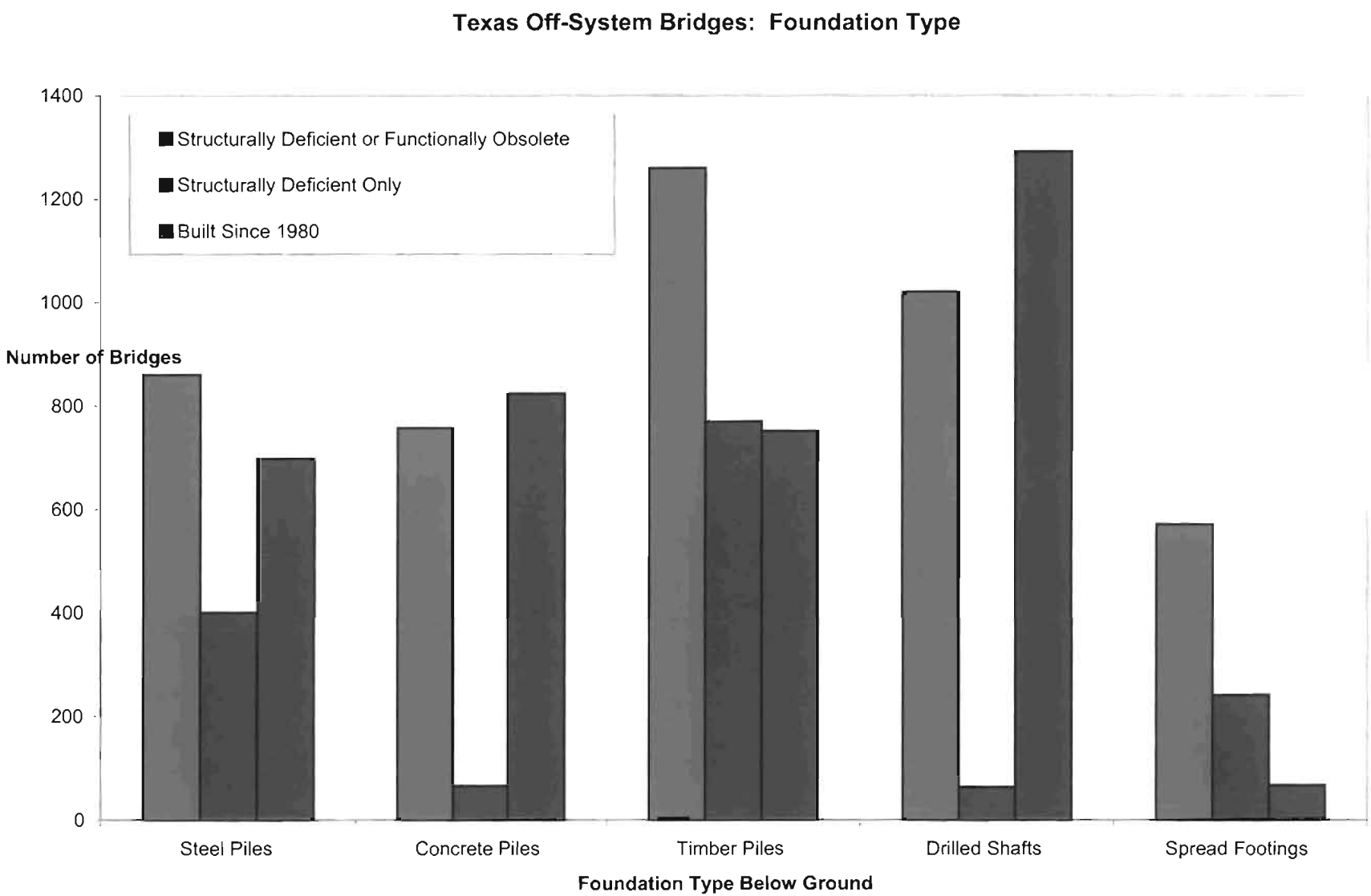
Texas Off-System Bridges: Foundation Type
Structurally Deficient or Functionally Obsolete
Structurally Deficient Only
Built Since 1980
Number of Bridges
1400
1200
1000
800
600
400
200
0
Steel Piles
Concrete Piles
Timber Piles
Drilled Shafts
Spread Footings
Foundation Type Below Ground

Texas Off-System Bridges: Foundation Type

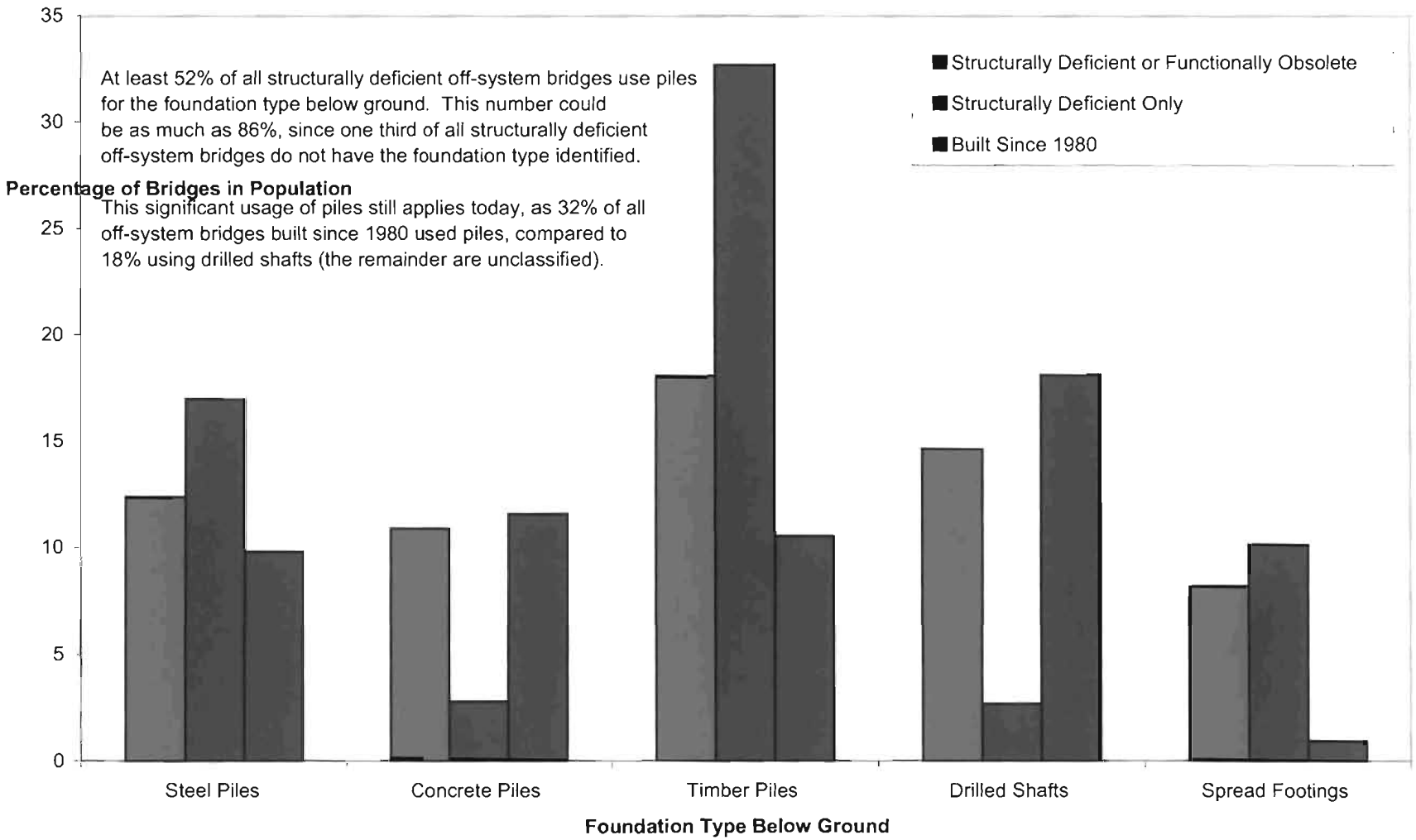

Geographic Distribution of Foundation Type for Recent Off-System Bridges

Built Since 1980

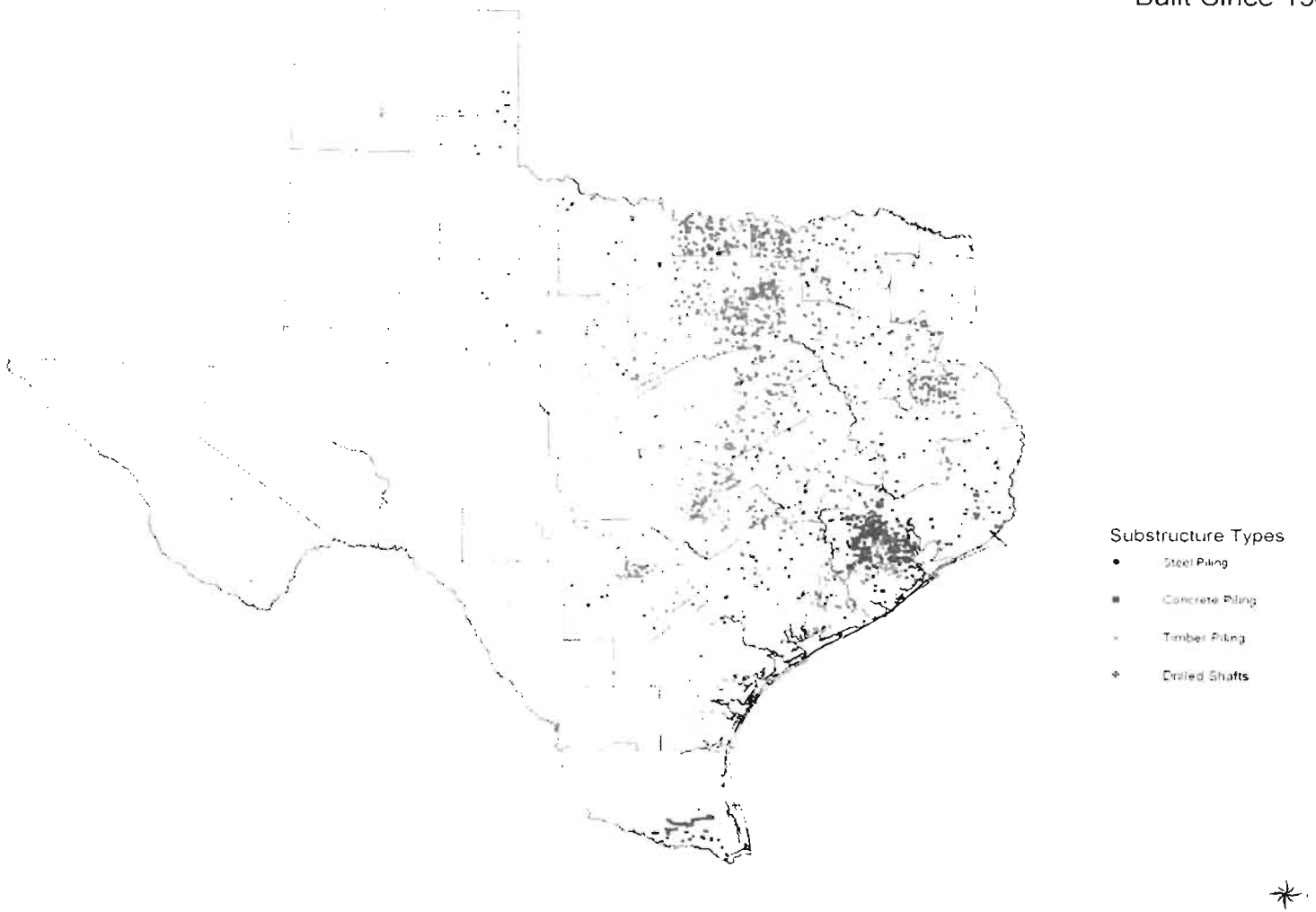

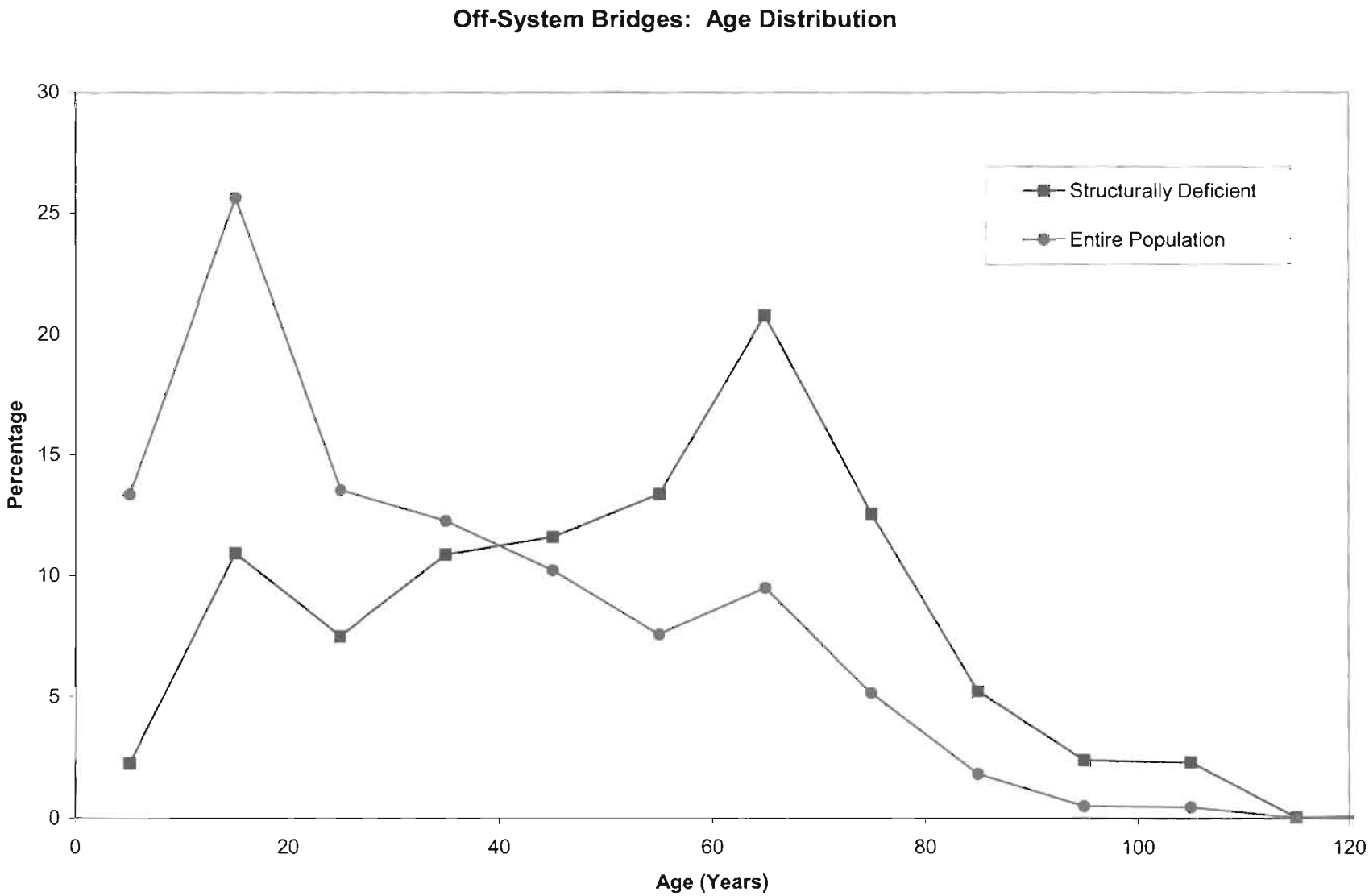
Off-System Bridges: Age Distribution
Structurally Deficient
Entire Population
Percentage
Age (Years)
0
5
10
15
20
25
30
0
20
40
60
80
100
120

Texas Off-System Bridges: Waterway Adequacy

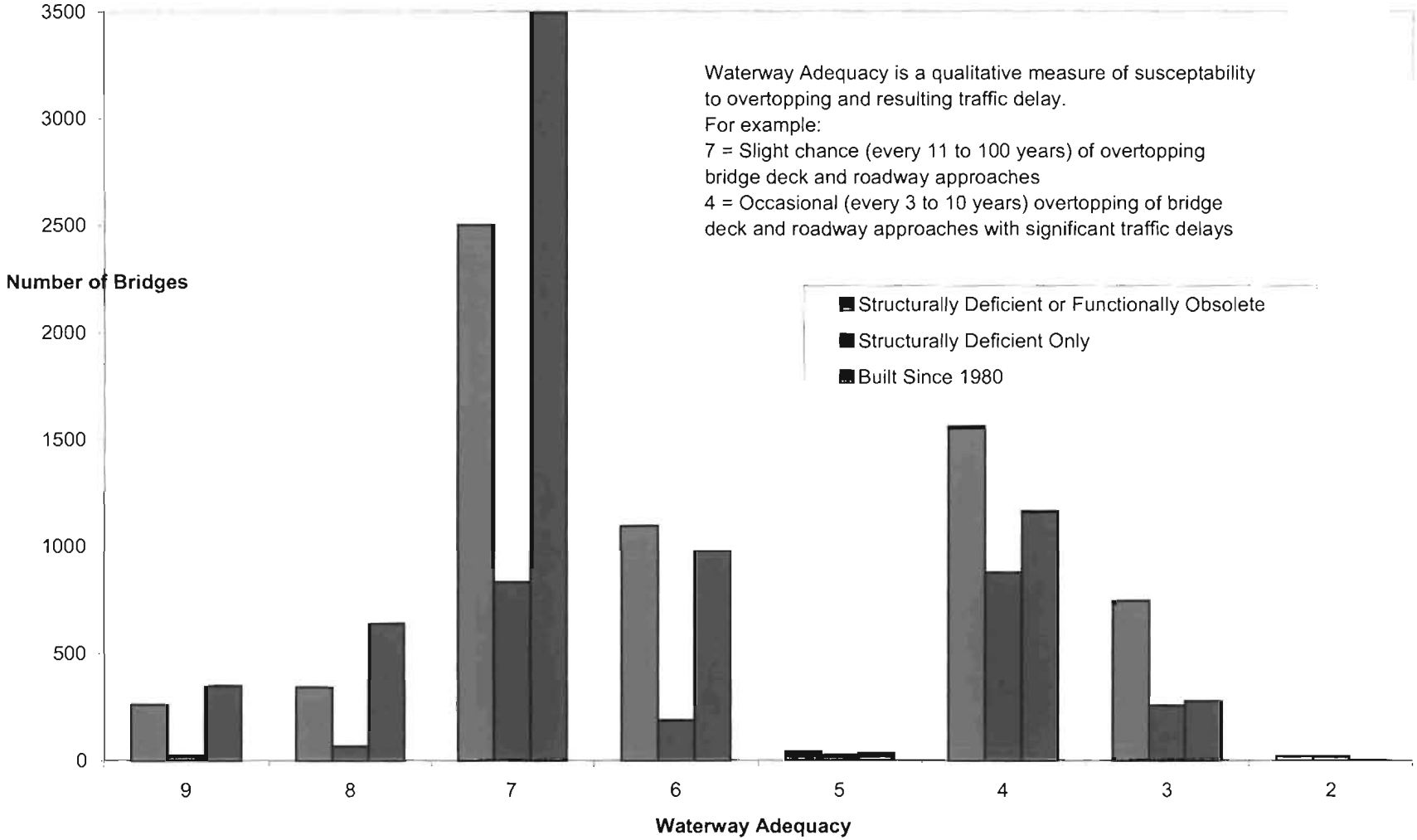

Texas Off-System Bridges: Channel and Channel Protection

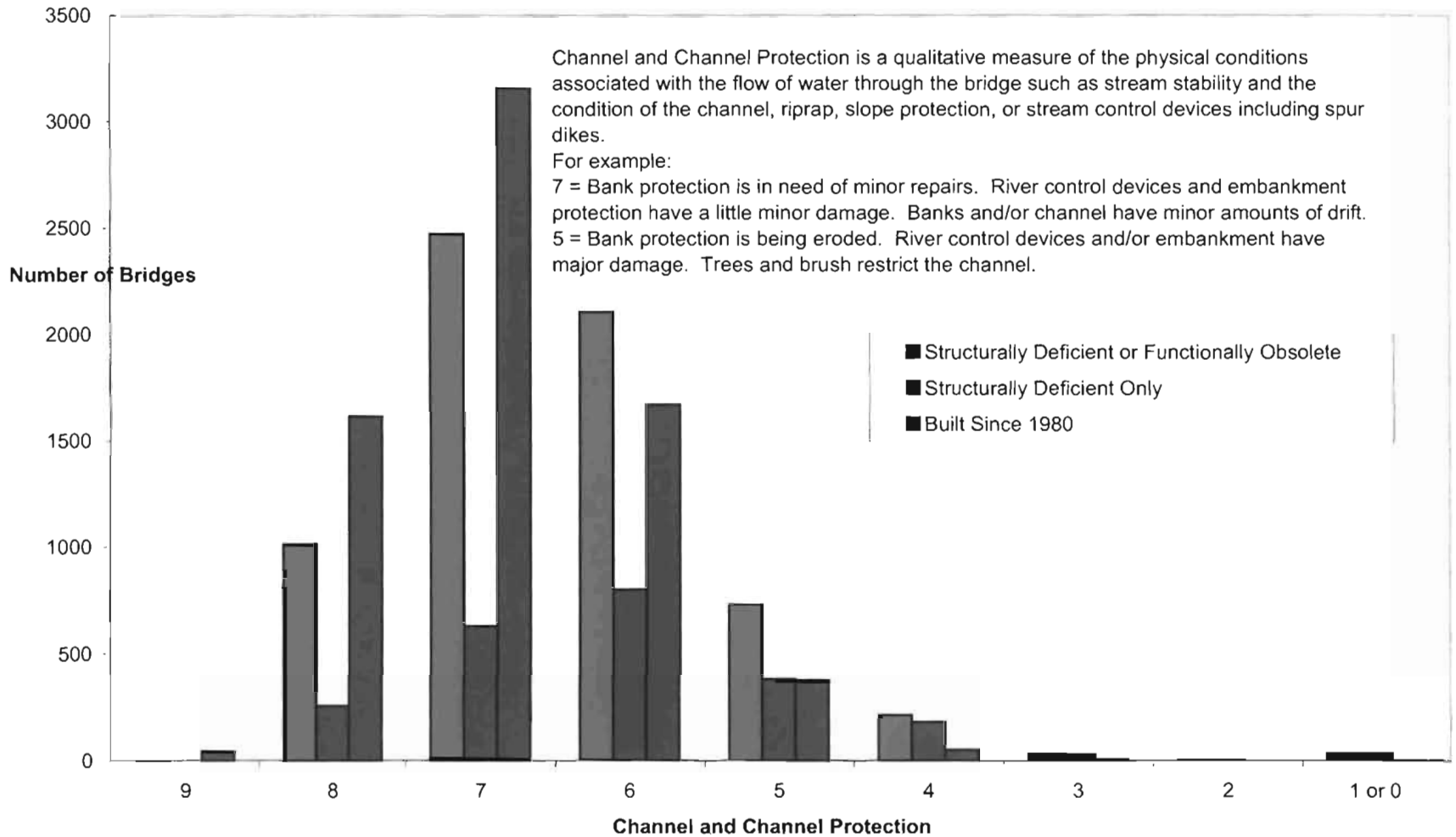

APPENDIX B

UNBONDED MONOSTRAND P.T. AND MULTIDIRECTIONAL CONNECTORS

GENERAL TECHNOLOGIES, INC.

MONO-STRAND PRODUCTS

ZERO VOID® SYSTEM

GENERAL TECHNOLOGIES, INC.

General Technologies, Inc. *is proud to present the newest and most reliable Fully Encapsulated Corrosion Protection System available to the Post-Tensioning Industry today.* ***The GTI Zero Void® Encapsulation System*** *is a completely new method of providing corrosion protection for unbonded tendons.*

The Zero Void® System *eliminates the need to strip the plastic sheathing protecting the strand prior to inserting the tendon into the stressing anchorage. GTI has perfected a special tool, the* ***GTI Sheathing Stripper®****, to remove the sheathing from inside the anchor cavity immediately prior to stressing. There is no bare strand exposure.*

The Zero Void® System *eliminates the need for tubes used in earlier corrosion protection systems. The Zero Void® System uses seals to provide thermal tolerance for shrinkage of the sheathing.* ***The Zero Void® Fixed End,*** *or Dead End, anchor can be installed by using spring-loaded wedges, eliminating pull seating of the fixed end wedges and the need for a tube to protect the strand. The Zero Void Fixed End anchor can be push seated in the fabricator's plant.*

The Zero Void® Nail-Less Pocket Former *was designed to eliminate the use of nails to fasten the stressing anchor to the edge form eliminating staining of the concrete surface.*

The Zero Void® System utilizes the ***GTI Plasma Cutter*** *to cut tendon tails after stressing. The GTI Plasma Cutter severs the strand very fast with virtually no heat build-up compared to oxy-acetylene torches and creates a clean precision cut at the specific distance from the wedges. As a result of using the fast and efficient GTI Plasma Cutter there is no need for the metal ring and Zero Void® cap can be permanently locked in place.*

GTI's patented ***Zero Void® Grease Cap*** *was created especially for the Zero Void® System. The cap is supplied as part of the Zero Void® system and is pre-filled with grease that is held in place by our patented clear membrane. The clear membrane will be broken by the cut tail of the PT tendon upon snapping the cap into place. Once the clear membrane has been broken the grease displaced by the tendon tail will fill the wedge cavity further increasing the water-tightness of the assembly.*

GTI's Zero Void® System meets or exceeds the latest PTI requirements for mono-strand corrosion protection systems. The Zero Void® System is a significant advancement in corrosion protection of unbonded tendons for post-tensioned concrete construction.

Our patented system consists of a cast anchor encapsulated in a thick (80 mil) high-density polyethylene material with excellent chemical and cold temperature resistance. This hard coating makes the system much more dependable than the ordinary epoxy coating that is currently available in the market today.

US PATENT No. 4,896,470; 5,072,558; 5,436,425; 5,440,842; 5,755,065; 5,770,286; 5,788,398; 5,839,235; 5,897,102; 8,017,165
US AND FOREIGN PATENTS PENDING

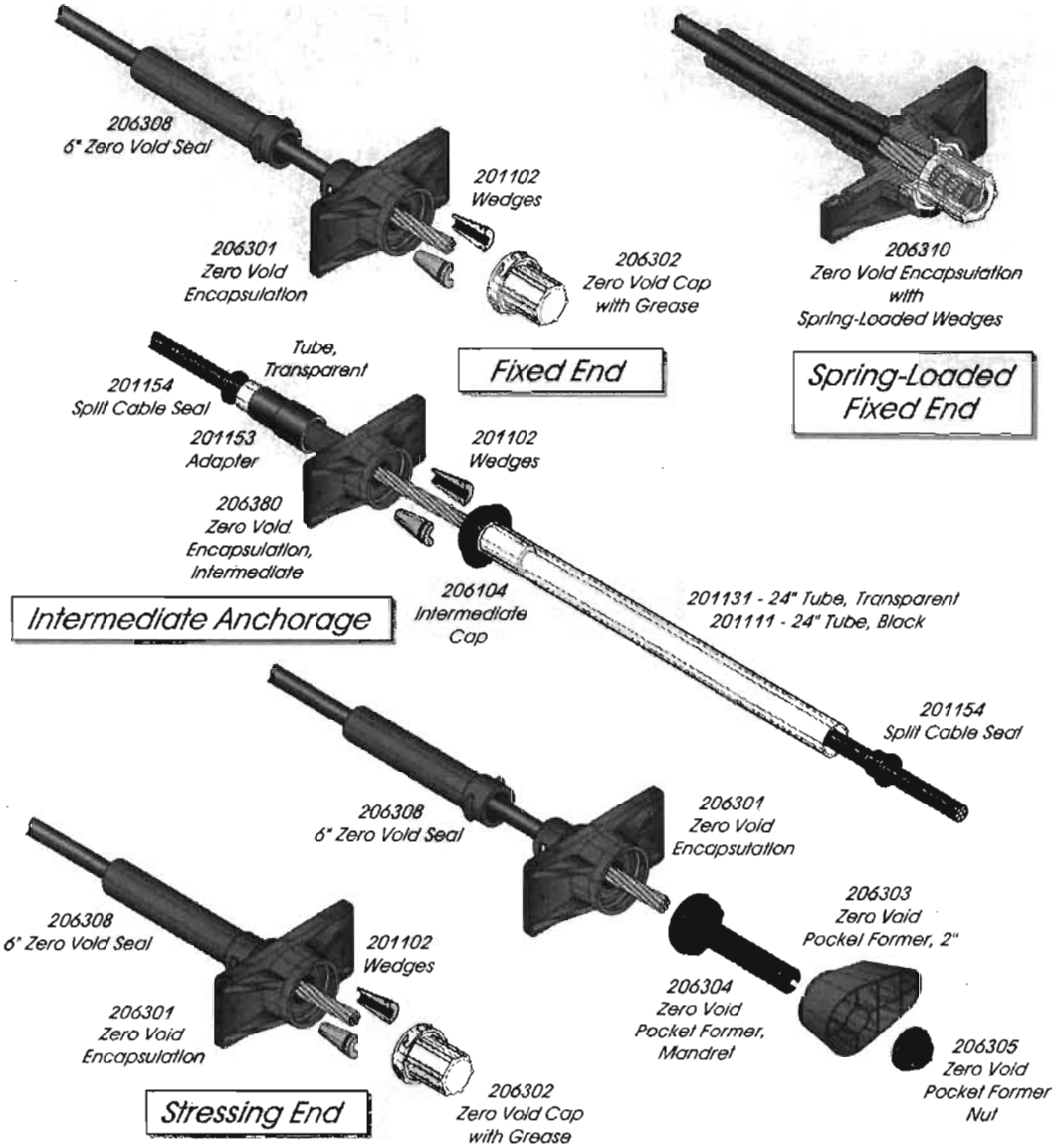

0.5" Zero Void® Mono-Strand Corrosion Protection System

US PATENT No. 4,896,470; 5,072,558; 5,436,425; 5,440,842; 5,755,065; 5,770,286; 5,788,398; 5,839,235; 5,897,102; 6,017,165
US & FOREIGN PATENTS PENDING

GENERAL TECHNOLOGIES, INC.

GTI ZERO VOID® ENCAPSULATED SYSTEM ORDER FORM

0.5" GTI ZERO VOID ENCAPSULATED PRODUCTS

PRODUCT	Part No.	Piece	Package	QUANTITY
ANCHORS & WEDGES				
ZV ENCAPSULATION, D.E. OR L.E.	206301	2,000	gaylord	
ZV ENCAPSULATION, D.E. W/SPRING LOADED WEDGES	206310		each	
ZV ENCAPSULATION, INTERMEDIATE	206380	2,000	gaylord	
WEDGES	201102	3,600	drum	
CAPS				
ZV CAP, W/GREASE	206302	300	sm box	
ZV CAP	206309	300	sm box	
ZV INTERMEDIATE CAP	206104	1,000	sm box	
POCKET FORMERS				
ZV POCKET FORMER, 2"	206303	150	box	
ZV POCKET FORMER, MANDREL	206304	375	box	
ZV POCKET FORMER, NUT	206305	425	sm box	
POCKET FORMER, 45°	206311	150	box	
POCKET FORMER, 30°	206312	150	box	
INTERMEDIATE POCKET FORMER	204106	1,200	box	
SEALS				
SEAL, 6", D.E.	206308	600	box	
24" TUBE, TRANSPARENT	201131	170	box	
12" TUBE, TRANSPARENT, W/SEAL	201141	325	box	
12" TUBE, TRANSPARENT, W/SEAL & ADAPTER	201142	250	box	
12" TUBE W/ADAPTER	201144	300	box	
ANCHOR ADAPTER	201151	1,250	box	
SPLIT CABLE SEAL	201154	1,200	box	
EQUIPMENT				
GTI PLASMA CUTTER	230100		each	
GTI SHEATHING STRIPPER	206320		each	
GTI SHEATHING STRIPPER CUTTING BLADES	206323		each	
TOTAL				

Company Name:		*P.O. No.:*	
Address:		*Date Ordered:*	
		Job:	
Phone:	*Fax:*	*Notes / Information Shown on Order:*	
Project Location:			
Ship to Address:			
Contractor:			
Phone:	*Date Required:*	*Sheet:*	*of*

Visit our website: www.gti-usa.net, E-mail your order to: sales@gti-usa.net

13022 Trinity Drive P.O. Box 1503 Stafford, Texas 77477 Tel: (281) 240-0550 Fax: (281) 240-0990

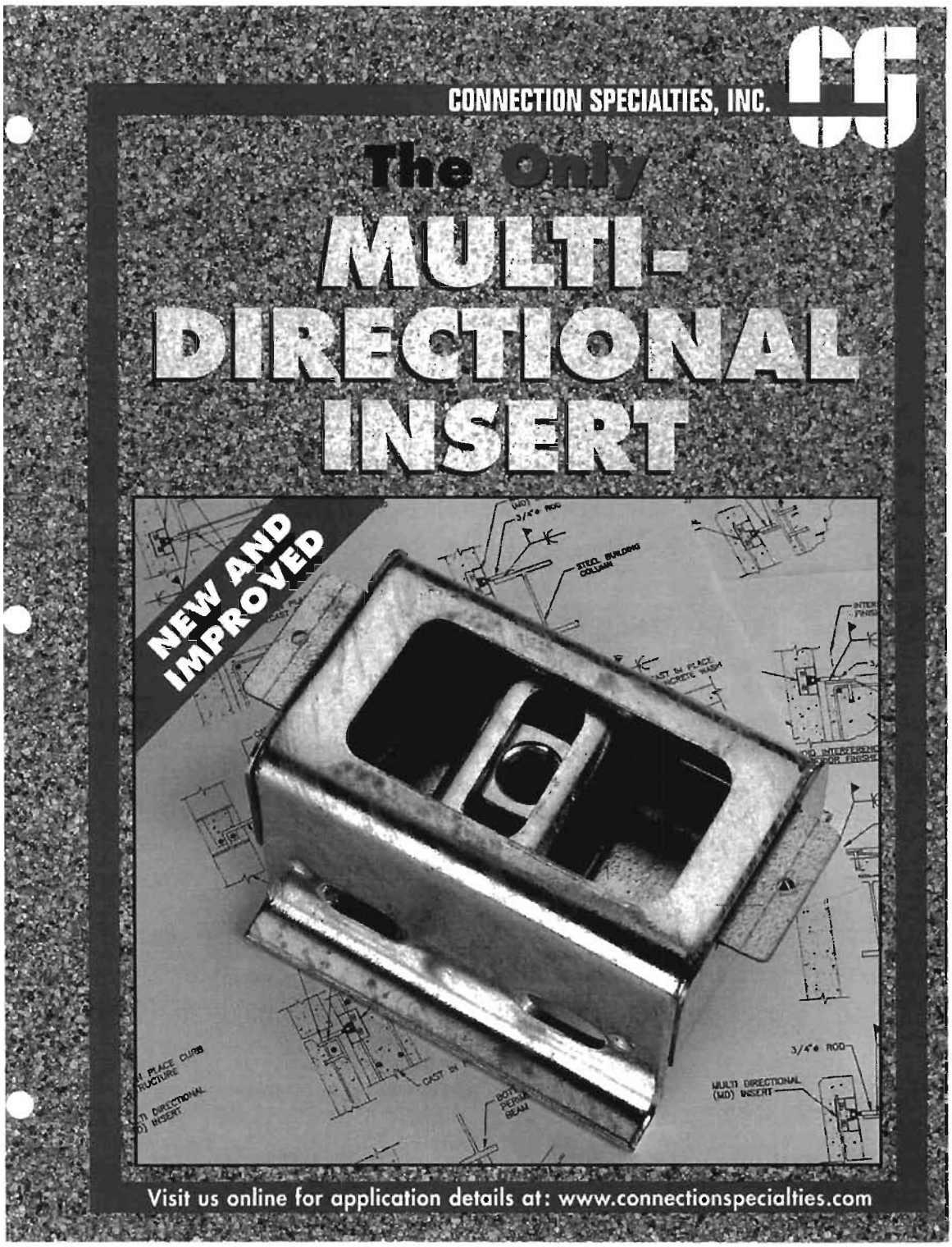
CONNECTION SPECIALTIES, INC.
The Only
MULTI-DIRECTIONAL INSERT
NEW AND IMPROVED
Visit us online for application details at: www.connectionspecialties.com

CONNECTION SPECIALTIES' MULTI-DIRECTIONAL INSERTS...

Developed to provide the precast and other building industries with an adjustable, economical tie back anchor.

Whether you are designing or specifying anchors for structural or architectural elements, the MD Series inserts provide the features architects and engineers look for:

HIGH PULL-OUT CAPACITY

With our design, the patented MD Series inserts provide an ultimate pull-out capacity of 20,000 lb. in 5,000 PSI concrete. The inserts include a built-in 3/4" or 1" (NC or coil) zinc plated heavy square nut.

MULTI-DIRECTIONAL MOVEMENT ABILITY

Modern building design specifications require the ability of precast and other facades to accommodate the movements of the structure due to wind, earthquake, temperature, etc. Our inserts are designed to allow combinations of movements resulting from floor deflections, thermal expansion/contraction and story drift.

ECONOMY

The MD Series double slotted design makes it possible to achieve a two-way free connection eliminating excess hardware items. **No more slotted angles, oversized holes, flexible rods, etc.** Embedded hardware in structures can be made smaller resulting in significant savings.

EASE OF ERECTION

The durable slotted design provides unparalleled erection tolerances. The built-in nut can be moved either vertically or horizontally to allow for field tolerances making the erector's job easier and more economical.

SUITABILITY FOR USE IN SEISMIC AREAS

In addition to the free movement ability, building code seismic design criteria require that inserts in concrete be anchored to steel reinforcement. The MD Series inserts are made with rebar slots to allow such anchorage.

FINISH

Hot dipped galvanized.
Packed 12 per box.

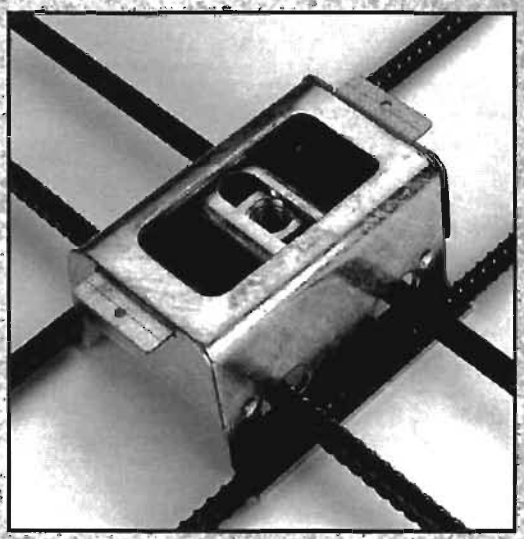

Rebar Configuration above works with Model 6MD350 and 8MD350

NEW!

Now with Plastic Front and Back Cover Plates to prevent any leakage!

CONNECTION SPECIALTIES, INC.
1-800-448-1302

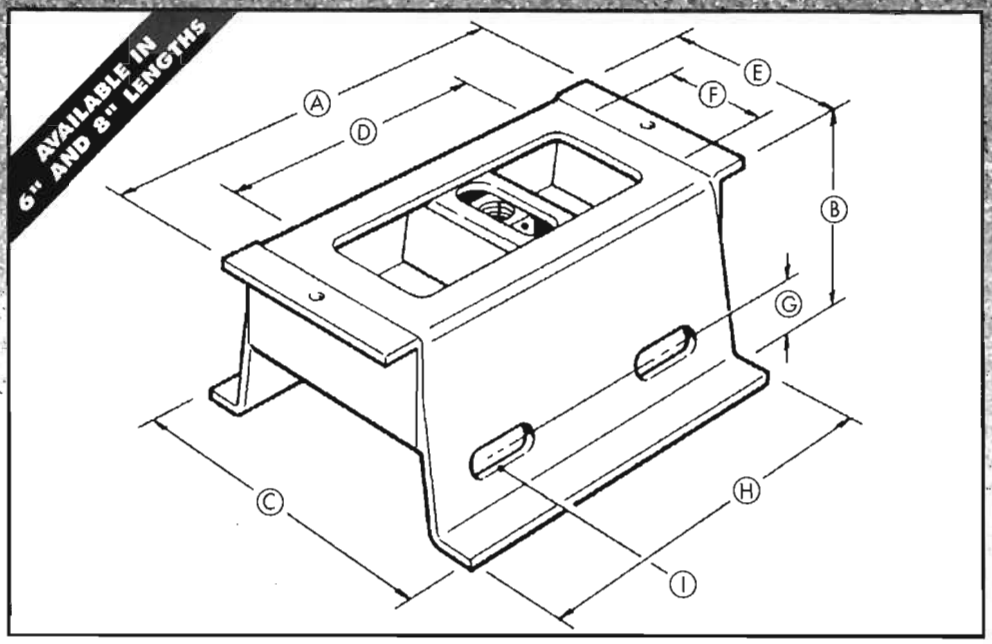

MD 275 Series

MODEL	NUT SIZE	Ultimate Pull-Out Cap*	A	B	C	D	E	F	G	H	I
6MD 275	3/4" NC	17,000 lb.	7 1/2"	2 3/4"	5 3/4"	4 1/2"	3 3/4"	2 1/4"	1/2"	6"	1/2" x 1 1/4"
6MD 275-1	1" NC	17,000 lb.	7 1/2"	2 3/4"	5 3/4"	4 1/2"	3 3/4"	2 1/4"	1/2"	6"	1/2" x 1 1/4"
6MD 275c	3/4" Coil	17,000 lb.	7 1/2"	2 3/4"	5 3/4"	4 1/2"	3 3/4"	2 1/4"	1/2"	6"	1/2" x 1 1/4"
6MD 275c-1	1" Coil	17,000 lb.	7 1/2"	2 3/4"	5 3/4"	4 1/2"	3 3/4"	2 1/4"	1/2"	6"	1/2" x 1 1/4"
8MD 275	3/4" NC	17,000 lb.	9 1/2"	2 3/4"	5 3/4"	6 1/2"	3 3/4"	2 1/4"	1/2"	8"	1/2" x 1 1/4"
8MD 275-1	1" NC	17,000 lb.	9 1/2"	2 3/4"	5 3/4"	6 1/2"	3 3/4"	2 1/4"	1/2"	8"	1/2" x 1 1/4"
8MD 275c	3/4" Coil	17,000 lb.	9 1/2"	2 3/4"	5 3/4"	6 1/2"	3 3/4"	2 1/4"	1/2"	8"	1/2" x 1 1/4"
8MD 275c-1	1" Coil	17,000 lb.	9 1/2"	2 3/4"	5 3/4"	6 1/2"	3 3/4"	2 1/4"	1/2"	8"	1/2" x 1 1/4"

MD 350 Series

MODEL	NUT SIZE	Ultimate Pull-Out Cap*	A	B	C	D	E	F	G	H	I
6MD 350	3/4" NC	20,000 lb.	7 1/2"	3 1/2"	5 5/8"	4 1/2"	3 5/8"	2 1/4"	1 1/4"	6"	5/8" x 1 1/4"
6MD 350-1	1" NC	20,000 lb.	7 1/2"	3 1/2"	5 5/8"	4 1/2"	3 5/8"	2 1/4"	1 1/4"	6"	5/8" x 1 1/4"
6MD 350c	3/4" Coil	20,000 lb.	7 1/2"	3 1/2"	5 5/8"	4 1/2"	3 5/8"	2 1/4"	1 1/4"	6"	5/8" x 1 1/4"
6MD 350c-1	1" Coil	20,000 lb.	7 1/2"	3 1/2"	5 5/8"	4 1/2"	3 5/8"	2 1/4"	1 1/4"	6"	5/8" x 1 1/4"
8MD 350	3/4" NC	20,000 lb.	9 1/2"	3 1/2"	5 5/8"	6 1/2"	3 5/8"	2 1/4"	1 1/4"	8"	5/8" x 1 1/4"
8MD 350-1	1" NC	20,000 lb.	9 1/2"	3 1/2"	5 5/8"	6 1/2"	3 5/8"	2 1/4"	1 1/4"	8"	5/8" x 1 1/4"
8MD 350c	3/4" Coil	20,000 lb.	9 1/2"	3 1/2"	5 5/8"	6 1/2"	3 5/8"	2 1/4"	1 1/4"	8"	5/8" x 1 1/4"
8MD 350c-1	1" Coil	20,000 lb.	9 1/2"	3 1/2"	5 5/8"	6 1/2"	3 5/8"	2 1/4"	1 1/4"	8"	5/8" x 1 1/4"

* Ultimate pull-out capacity is based on a single insert, without rebar, embedded in 5,000 P.S.I. concrete with a 1'-0" minimum distance to concrete edge.

LOOSE HARDWARE

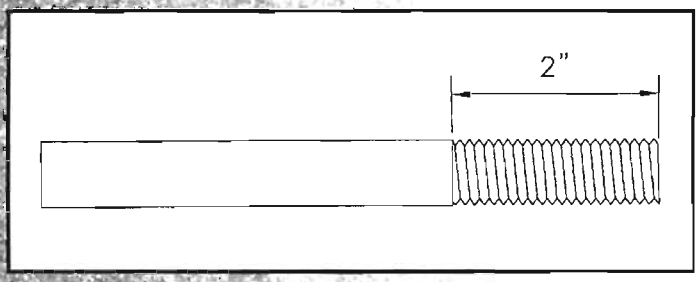

A36 Threaded Rods

Product Number	Description
TR6 - .75	3/4" dia. x 6"
TR8 - .75	3/4" dia. x 8"
TR10 - .75	3/4" dia. x 10"
TR12 - .75	3/4" dia. x 12"
TR6 - 1	1" dia. x 6"
TR8 - 1	1" dia. x 8"
TR10 - 1	1" dia. x 10"
TR12 - 1	1" dia. x 12"

- *Custom lengths available*
- *Zinc plated finish*

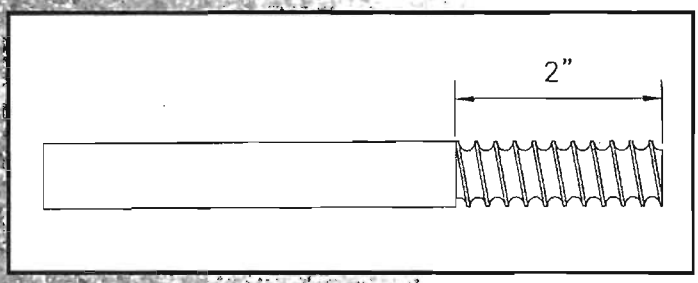

High Strength Coil Threaded Rods

Product Number	Description
CR6 - .75	3/4" dia. x 6"
CR8 - .75	3/4" dia. x 8"
CR10 - .75	3/4" dia. x 10"
CR12 - .75	3/4" dia. x 12"
CR6 - 1	1" dia. x 6"
CR8 - 1	1" dia. x 8"
CR10 - 1	1" dia. x 10"
CR12 - 1	1" dia. x 12"

NEW!

MD Series inserts are now available with built-in 3/4" or 1" (NC or coil) heavy square nut

Erector's Note: Thread rod finger tight to back of insert body

CONNECTION SPECIALTIES, INC.

8914 "H" Street • Omaha Nebraska 68127

1-800-448-1302

For application details, visit us online at: www.connectionspecialties.com

THE ONLY MULTI-DIRECTIONAL INSERT!

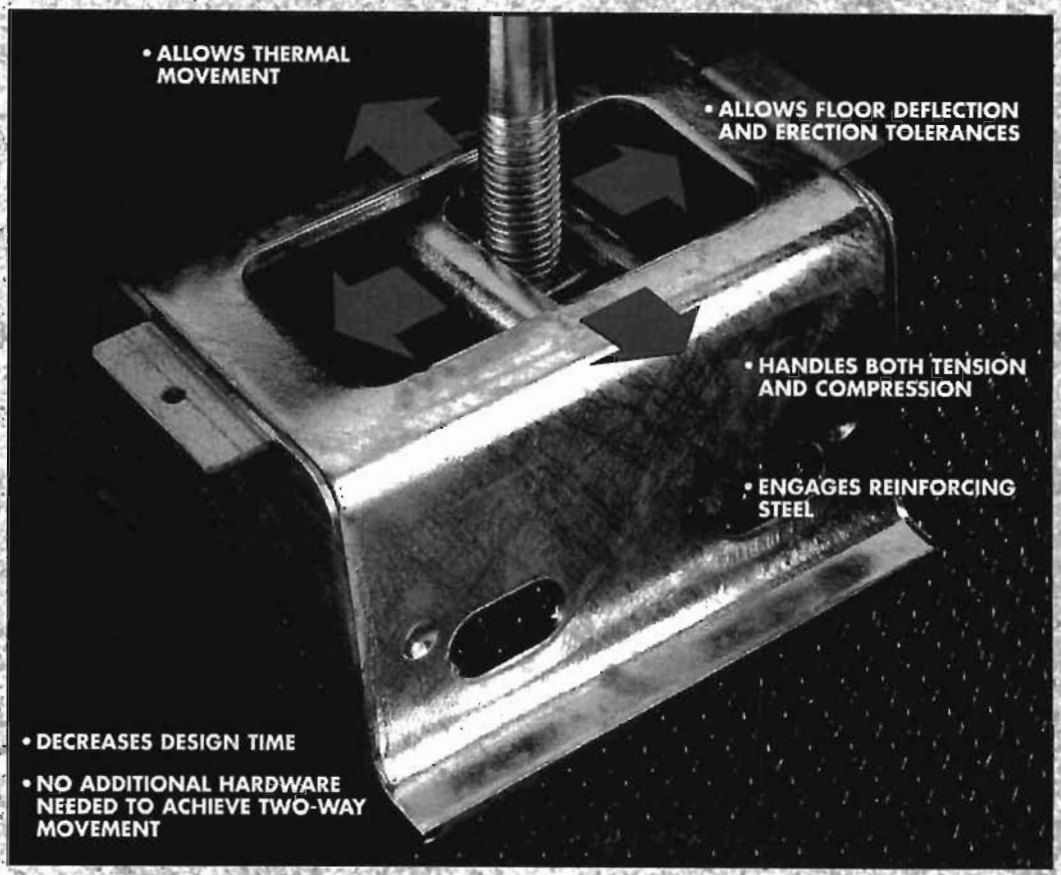

- *Eliminates loose hardware such as angles, nuts and washers*
- *More economical embed in structure*
- *Eliminates need for pockets in structure*
- *Minimizes eccentricity on embedded plate*
- *Minimizes field welding*
- *Reduces design time*

Since 1979, Connection Specialties has provided the construction industry with the only multi-directional tie back anchor.

CONNECTION SPECIALTIES, INC.

TYPICAL APPLICATION COMPARISONS

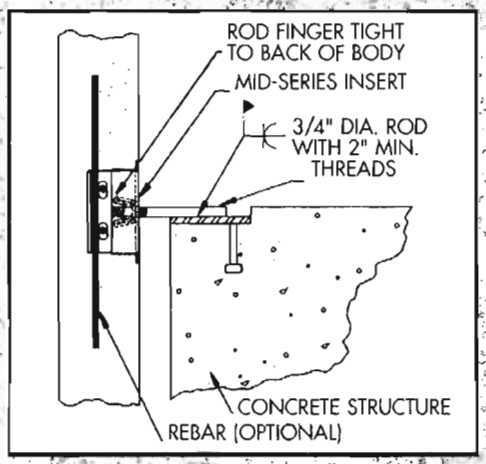

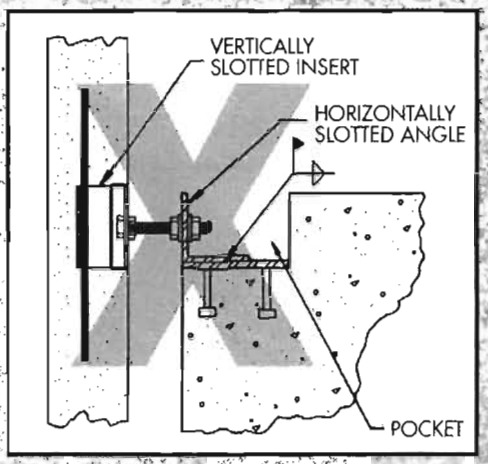

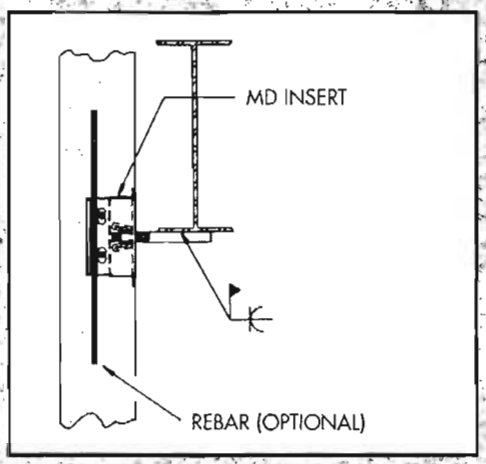

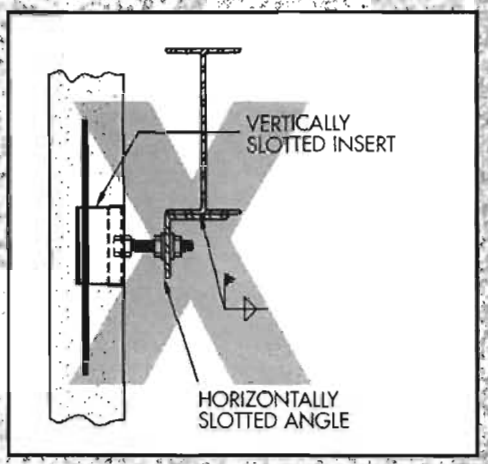

MD SERIES INSERT

ONE WAY SLOTTED INSERT

For additional information or to talk with a sales representative, call toll-free ***1-800-448-1302***

CONNECTION SPECIALTIES, INC.

8914 "H" Street • Omaha Nebraska 68127

(402) 597-2997 Fax (402) 597-9789

For application details, visit us online at: www.connectionspecialties.com